FRI series

Maximum working pressure up to 2 MPa (20 bar) - Flow rate up to 2500 l/min

TYPICAL FILTER SIZING Selection Software

Step 1

Select “FILTER SIZING SOFTWARE” after login

OR

Select “FILTER SIZING” after login from a product page

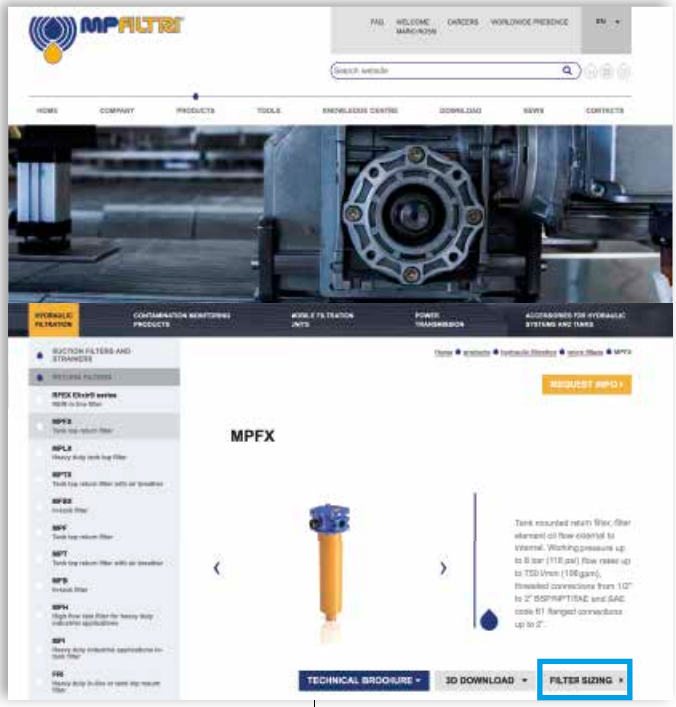

Step 2

Choose the type of filter family.
Enter the main data for sizing the filter then push CALCULATE.

Enter the main data for sizing the filter then push CALCULATE.

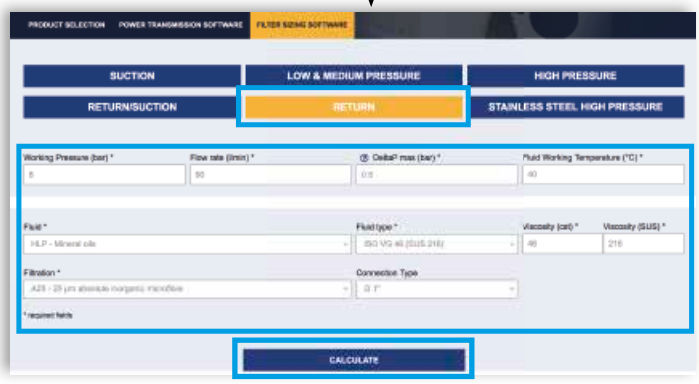

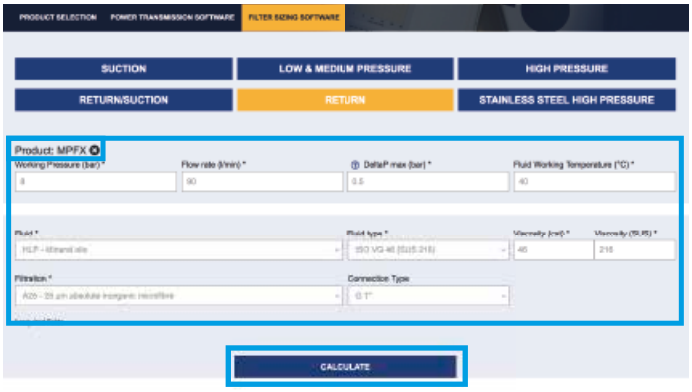

Step 3

Select the desidered options to choose the appropriate filter type for the application.

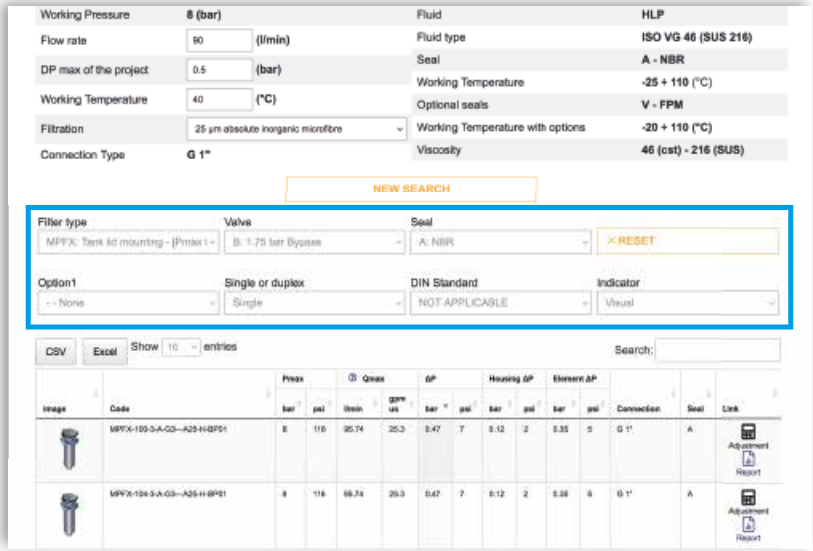

Step 4

Choose the most suitable filter from the proposed list.

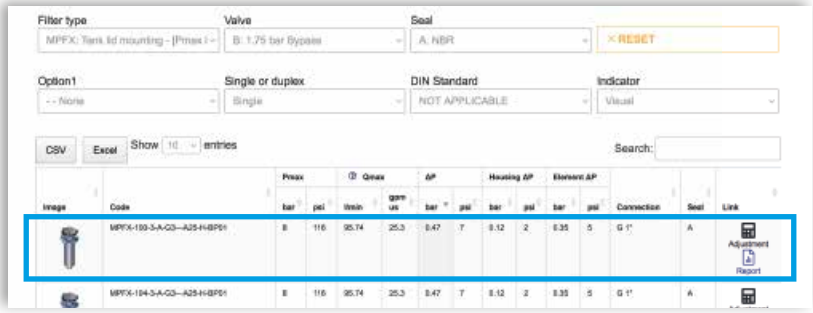

Step 5

A SAVE YOUR FILTER'S REPORT

B MANUAL EDIT

It is possible to change the filter modifying every parameter.

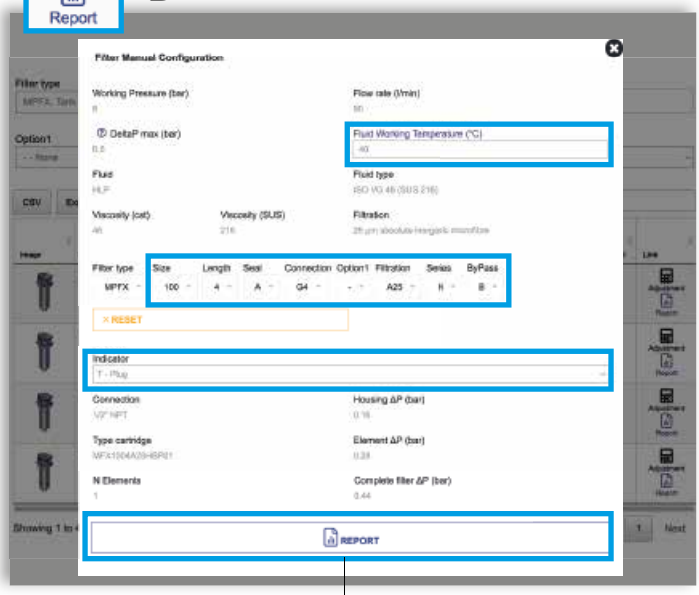

SAVE IN YOUR ARCHIVE
typing your reference data and then SAVE AS PDF

A new browser window displays the pdf

see **A**

Close the report window

By clicking your WELCOME button, the SHOW REPORTS is displayed: select it to see your filters list.

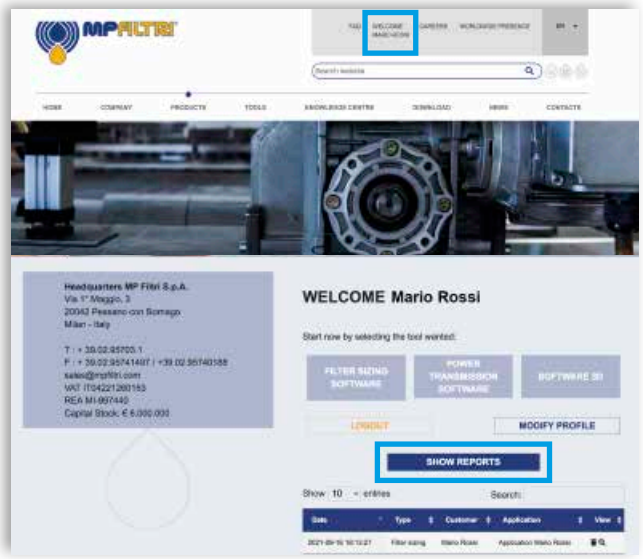

FRI GENERAL INFORMATION

Description

Return filter

Maximum working pressure up to 2 MPa (20 bar)
Flow rate up to 2500 l/min

FRI is a range of return filters for protection of the reservoir against the system contamination.
They could be directly fixed to the reservoir in immersed or semi-immersed position or connected to the lines of the system through the hydraulic fittings.
The filter output must be always immersed into the fluid to avoid aeration or foam generation into the reservoir.

Available features:
- Female threaded connections up to 2 1/2" and flanged connections up to 3 1/2", for a maximum flow rate of 2500 l/min
- Double input connections, to connect several return lines or drains
- Fine filtration rating, to get a good cleanliness level into the reservoir
- Bypass valve, to relieve excessive pressure drop across the filter media
- Visual, electrical and electronic differential clogging indicators

Common applications:
Heavy duty industrial equipment

Technical data

Filter housing materials
- Filter body
  Aluminium: FRI 255
  Anodized Aluminium: FRI 025-040-100-250-630
  Phosphatized Steel: FRI 850

- Cover
  Polyamide, GF reinforced: FRI 255
  Anodized Aluminium: FRI 025-040-100-250-630-850

- Valve: Polyamide, GF reinforced - Steel

Bypass valve
Opening pressure 240 kPa (2.4 bar) ±10%

Δp element type
- Microfibre filter elements - series N: 10 bar
- Fluid flow through the filter element from OUT to IN

Seals
- Standard NBR series A
- Optional FPM series V

Temperature
From -25 °C to +110 °C

Note
FRI filters are provided
for vertical mounting

Weights [kg] and volumes [dm³]

Filter series	Weights [kg]	Volumes [dm³]
	Length 1	Length 1
FRI 025	1.0	0.28
FRI 040	2.0	0.70
FRI 100	3.8	1.09
FRI 250	6.3	2.60
FRI 255	4.2	3.20
FRI 630	13.8	7.05
FRI 850	48.0	21.50

FILTER ASSEMBLY SIZING
Flow rates [l/min]

		Filter element design - N Series							
Filter series	Length	A03	A06	A10	A16	A25	M25 M60 M90	P10	P25
FRI 025	**1**	6	10	17	19	43	122	43	47
FRI 040	**1**	19	23	43	45	94	155	94	102
FRI 100	**1**	32	34	89	92	187	260	187	206
FRI 250	**1**	144	179	271	300	448	645	448	490
FRI 255	**1**	144	179	271	300	448	645	448	490
FRI 630	**1**	242	279	508	577	834	1446	834	911
FRI 850	**1**	440	541	971	1143	1705	2528	1705	1880

Maximum flow rate for a complete return filter with a pressure drop Δp = 0.5 bar.
The reference fluid has a kinematic viscosity of 30 mm^2/s (cSt) and a density of 0.86 kg/dm^3.
For different pressure drop or fluid viscosity we recommend to use our selection software available on www.mpfiltri.com.
You can also calculate the right size using the formulas present on the FILTER SIZING paragraph at the beginning of the full catalogue or at the beginning of the filter family brochure.
Please, contact our Sales Department for further additional information.

Hydraulic symbols

Filter series	Style 1 connection + Diff. indic.	Style 2 connections + Diff. indic.
FRI 025		•
FRI 040		•
FRI 100		•
FRI 250		•
FRI 255	•	
FRI 630		•
FRI 850	•	

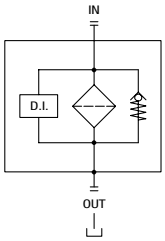

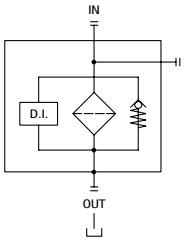

Pressure drop

Filter housings Δp pressure drop

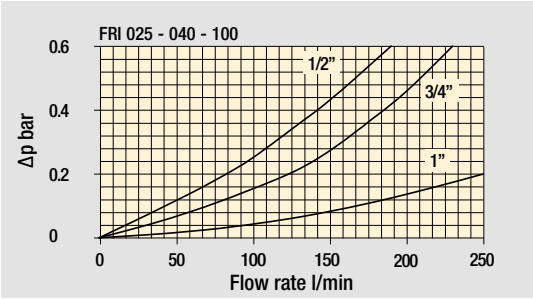

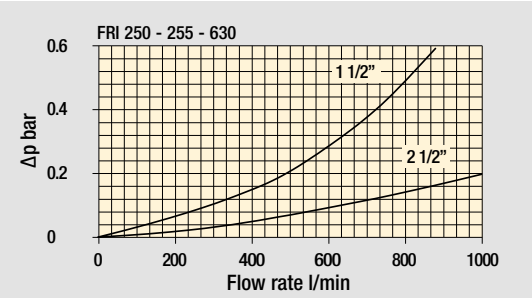

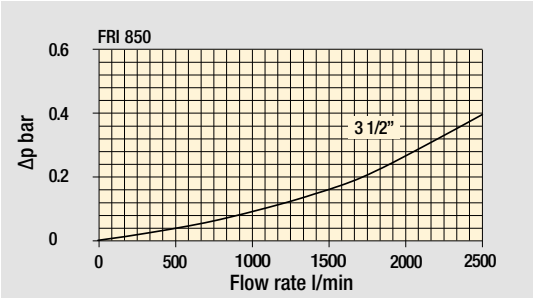

Bypass valve pressure drop

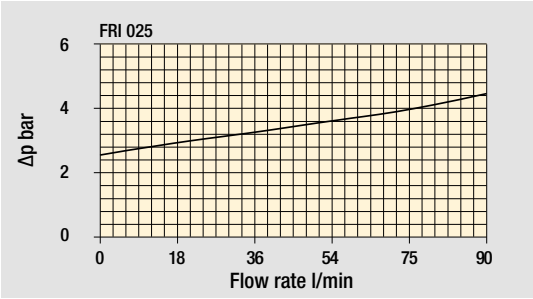

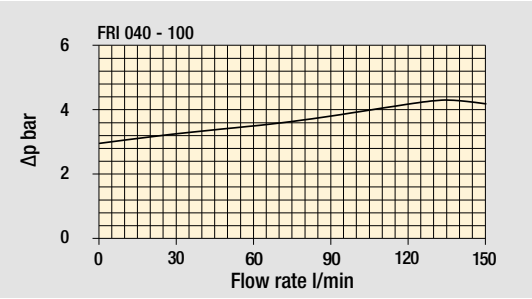

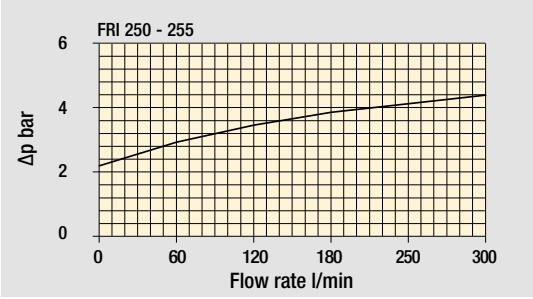

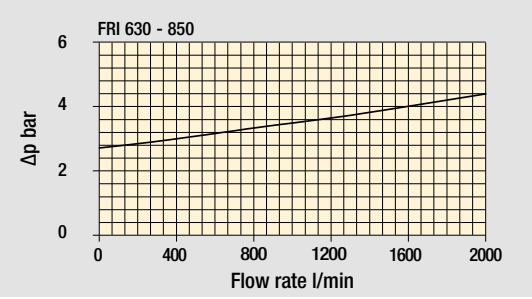

The curves are plotted using mineral oil with density of 0.86 kg/dm^3 in compliance with ISO 3968. Δp varies proportionally with density.

Designation & Ordering code

COMPLETE FILTER

Configuration example 1:	FRI025	B	A	G1	A25	N	P01
Configuration example 2:	FRI040	S	V	G2	M25	N	P01

Series and size

FRI025
FRI040

Bypass valve

B With bypass 2.4 bar
S Without bypass

Seals and treatments

A NBR
V FPM

Connections for FRI025	Connections for FRI040
G1 G 1/2”	G 3/4”
G2 1/2” NPT	3/4” NPT
G3 SAE 8 - 3/4” - 16 UNF	SAE 12 - 1 1/16” - 12 UN

Filtration rating (filter media)

A03 Inorganic microfiber 3 µm	**M25** Wire mesh 25 µm
A06 Inorganic microfiber 6 µm	**M60** Wire mesh 60 µm
A10 Inorganic microfiber 10 µm	**M90** Wire mesh 90 µm
A16 Inorganic microfiber 16 µm	**P10** Resin impregnated paper 10 µm
A25 Inorganic microfiber 25 µm	**P25** Resin impregnated paper 25 µm

Element Δp

N 10 bar

Execution

P01 MP Filtri standard
Pxx Customized

FILTER ELEMENT

Configuration example 1:	CU025	A25	N	P01
Configuration example 2:	CU040	M25	V	P01

Element series and size

CU025
CU040

Filtration rating (filter media)

A03 Inorganic microfiber 3 µm	**M25** Wire mesh 25 µm
A06 Inorganic microfiber 6 µm	**M60** Wire mesh 60 µm
A10 Inorganic microfiber 10 µm	**M90** Wire mesh 90 µm
A16 Inorganic microfiber 16 µm	**P10** Resin impregnated paper 10 µm
A25 Inorganic microfiber 25 µm	**P25** Resin impregnated paper 25 µm

Seals and treatments

N NBR
V FPM

Execution

P01 MP Filtri standard
Pxx Customized

CLOGGING INDICATORS

See page 266

DEA Electrical differential indicator	**DTA** Electrical differential indicator
DEM Electrical differential indicator	**DVA** Visual differential indicator
DLA Electrical / visual differential indicator	**DVM** Visual differential indicator
DLE Electrical / visual differential indicator	**T2** Plug

FRI025

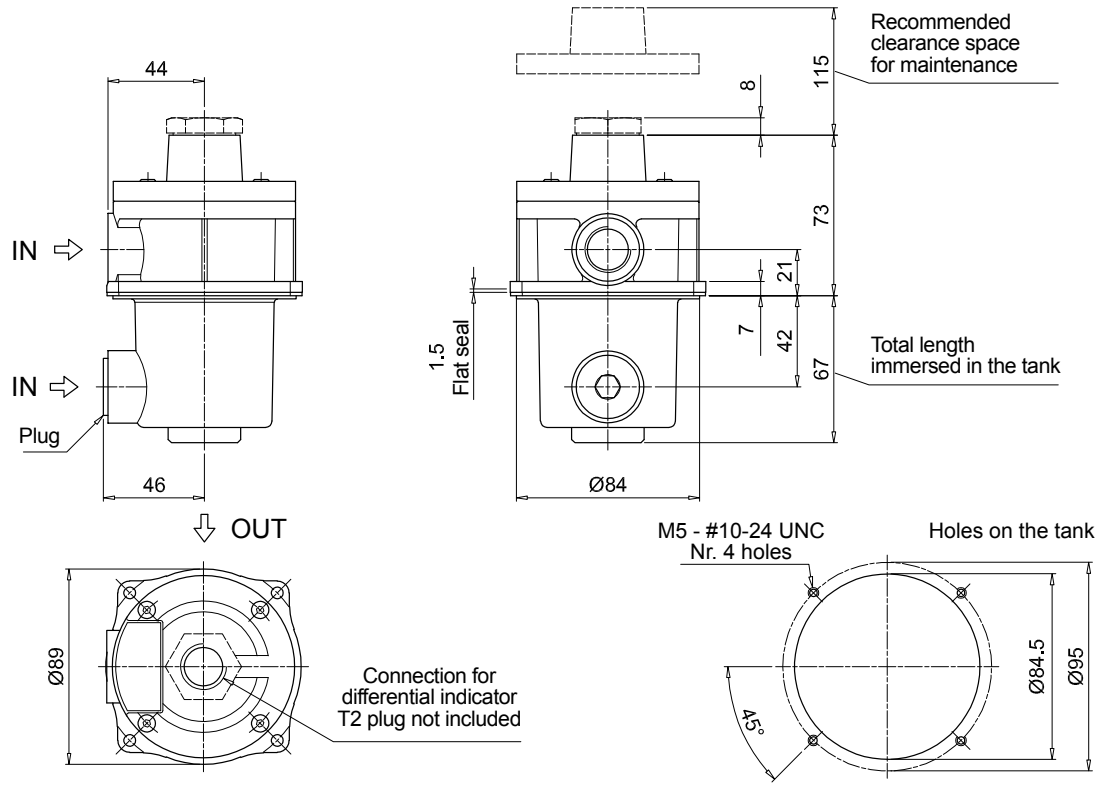

FRI040

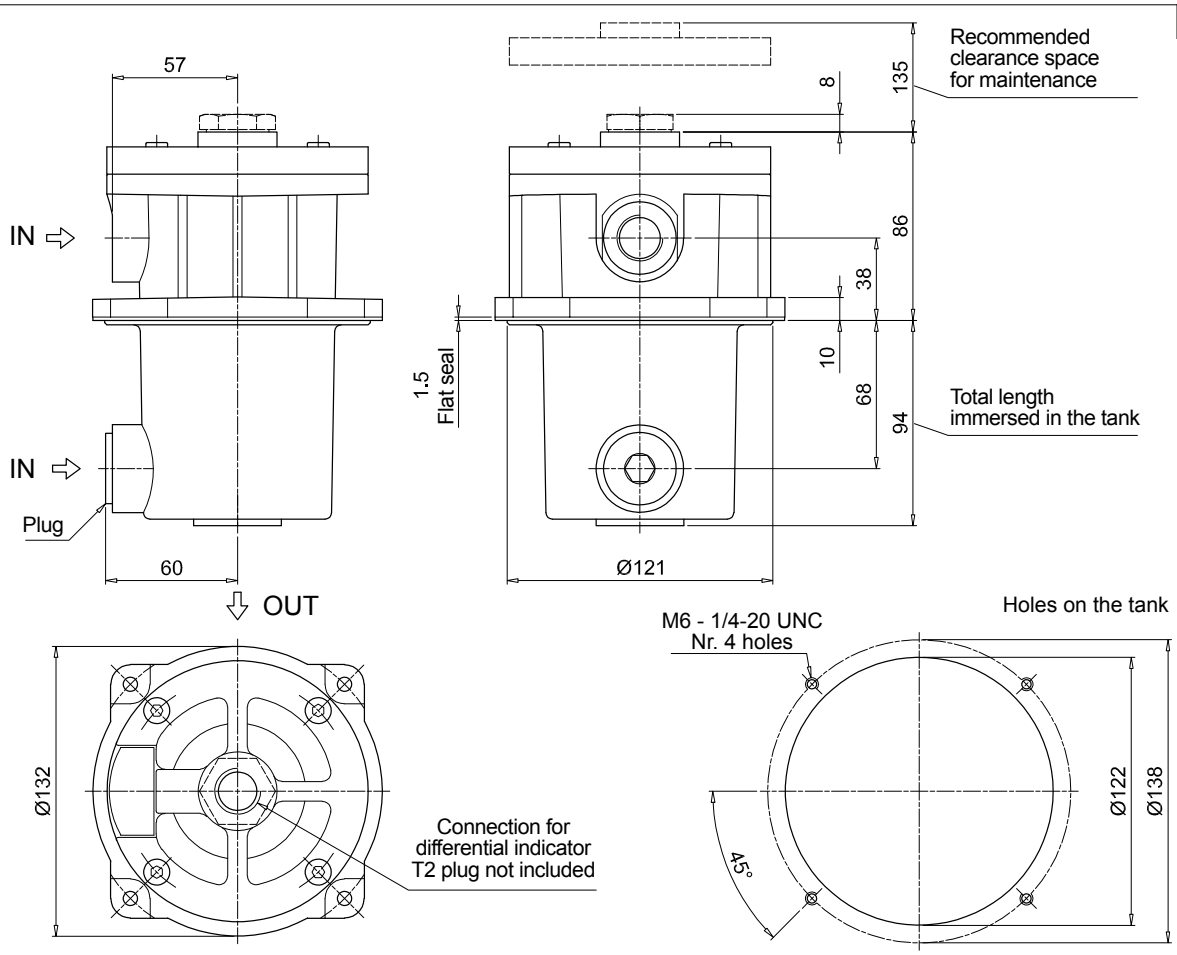

Designation & Ordering code

COMPLETE FILTER

Configuration example 1:	FRI100	B	A	G1	A25	N	P01
Configuration example 2:	FRI630	S	V	F2	M25	N	P01

Series and size

FRI100
FRI250
FRI630

Bypass valve

B With bypass 2.4 bar
S Without bypass

Seals and treatments

A NBR
V FPM

Connections for FRI100	Connections for FRI250	Connections for FRI630
G1 G 1”	G 1 1/2”	G 2 1/2”
G2 1” NPT	1 1/2” NPT	2 1/2” NPT
G3 SAE 16 - 1 5/16” - 12 UN	SAE 24 - 1 7/8” - 12 UN	SAE 32 - 2 1/2” - 12 UN
F1 1” SAE 3000 psi/M	1 1/2” SAE 3000 psi/M	2 1/2” SAE 3000 psi/M
F2 1” SAE 3000 psi/UNC	1 1/2” SAE 3000 psi/UNC	2 1/2” SAE 3000 psi/UNC

Filtration rating (filter media)

A03 Inorganic microfiber 3 µm
A06 Inorganic microfiber 6 µm
A10 Inorganic microfiber 10 µm
A16 Inorganic microfiber 16 µm
A25 Inorganic microfiber 25 µm
M25 Wire mesh 25 µm
M60 Wire mesh 60 µm
M90 Wire mesh 90 µm
P10 Resin impregnated paper 10 µm
P25 Resin impregnated paper 25 µm

Element Δp

N 10 bar

Execution

P01 MP Filtri standard
Pxx Customized

FILTER ELEMENT

Configuration example 1:	CU100	A25	N	P01
Configuration example 2:	CU630	M25	V	P01

Element series and size

CU100
CU250
CU630

Filtration rating (filter media)

A03 Inorganic microfiber 3 µm
A06 Inorganic microfiber 6 µm
A10 Inorganic microfiber 10 µm
A16 Inorganic microfiber 16 µm
A25 Inorganic microfiber 25 µm
M25 Wire mesh 25 µm
M60 Wire mesh 60 µm
M90 Wire mesh 90 µm
P10 Resin impregnated paper 10 µm
P25 Resin impregnated paper 25 µm

Seals and treatments

N NBR
V FPM

Execution

P01 MP Filtri standard
Pxx Customized

CLOGGING INDICATORS

See page 266

DEA Electrical differential indicator
DEM Electrical differential indicator
DLA Electrical / visual differential indicator
DLE Electrical / visual differential indicator
DTA Electrical differential indicator
DVA Visual differential indicator
DVM Visual differential indicator
T2 Plug

FRI100
Threaded connections "G"

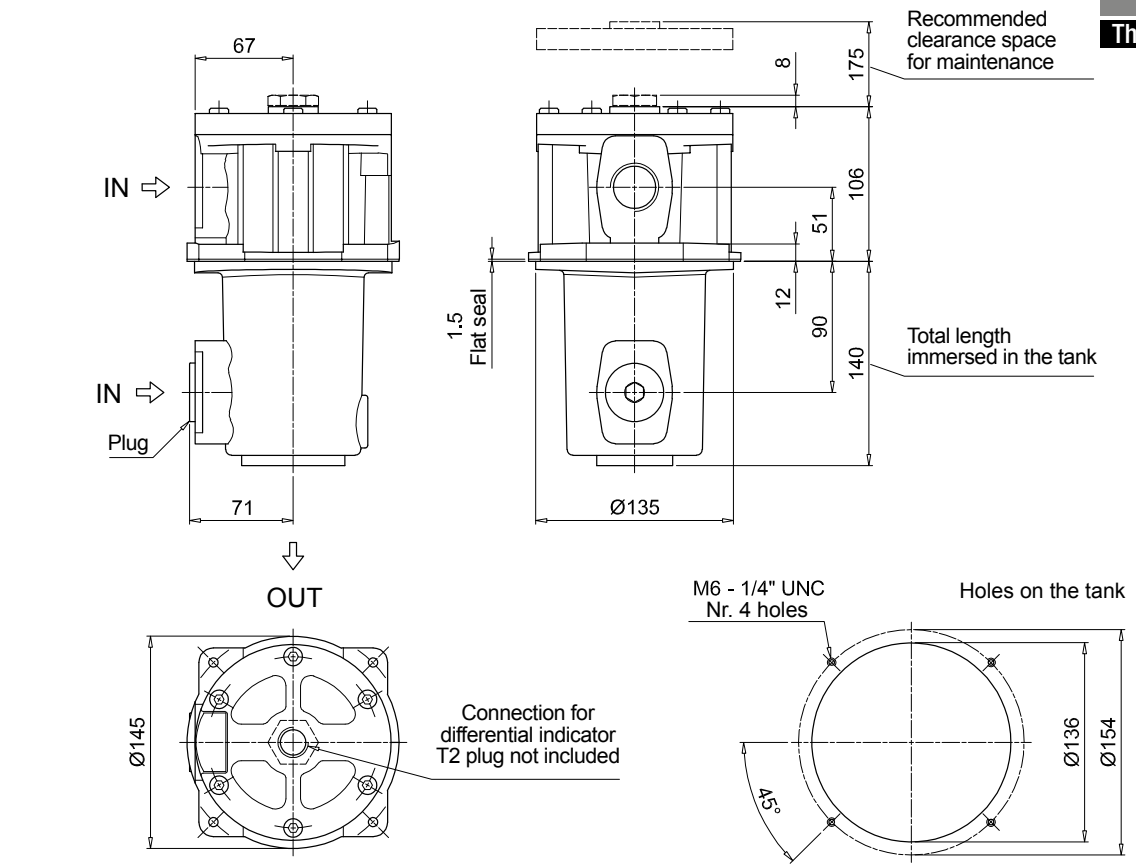

FRI100
Flange connections "F"

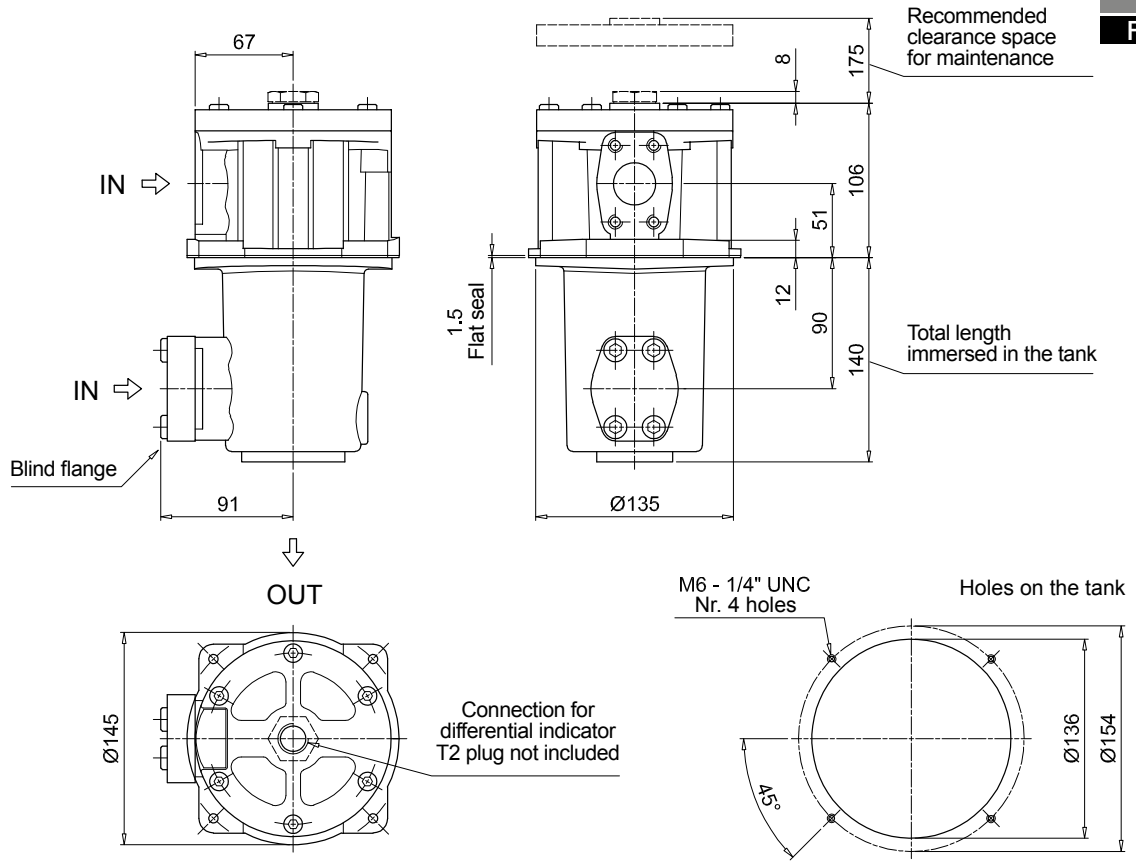

Dimensions

FRI250
Threaded connections "G"

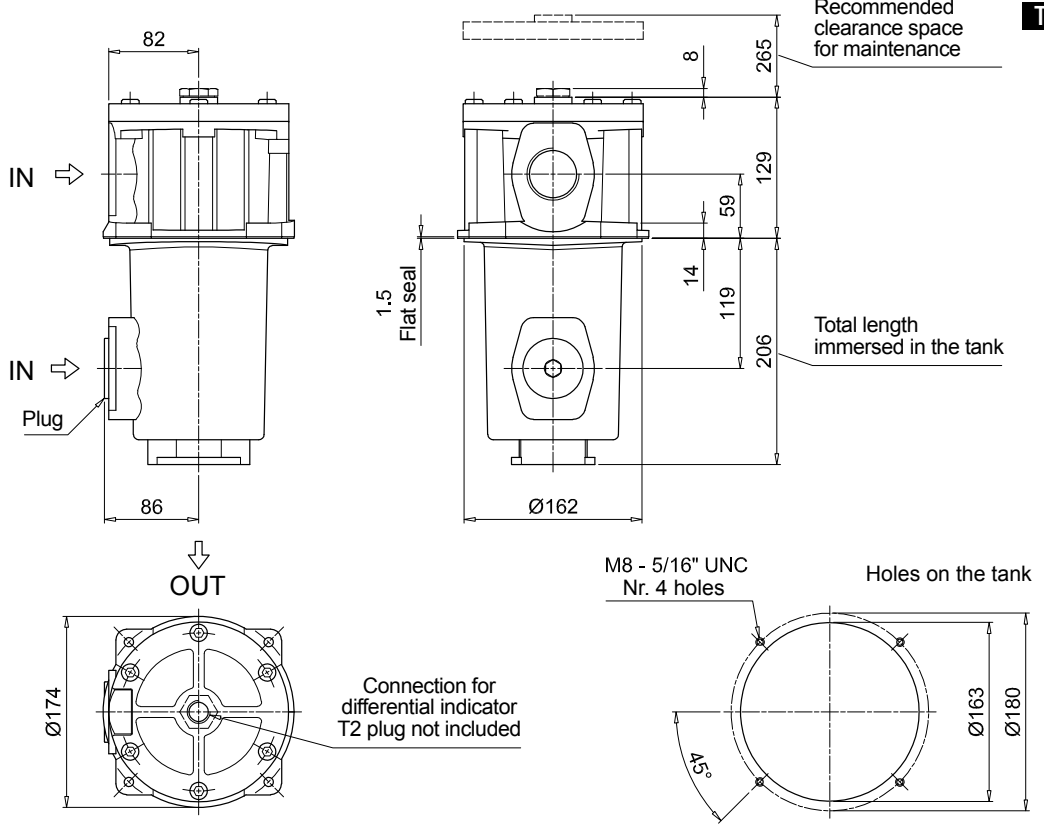

FRI250
Flange connections "F"

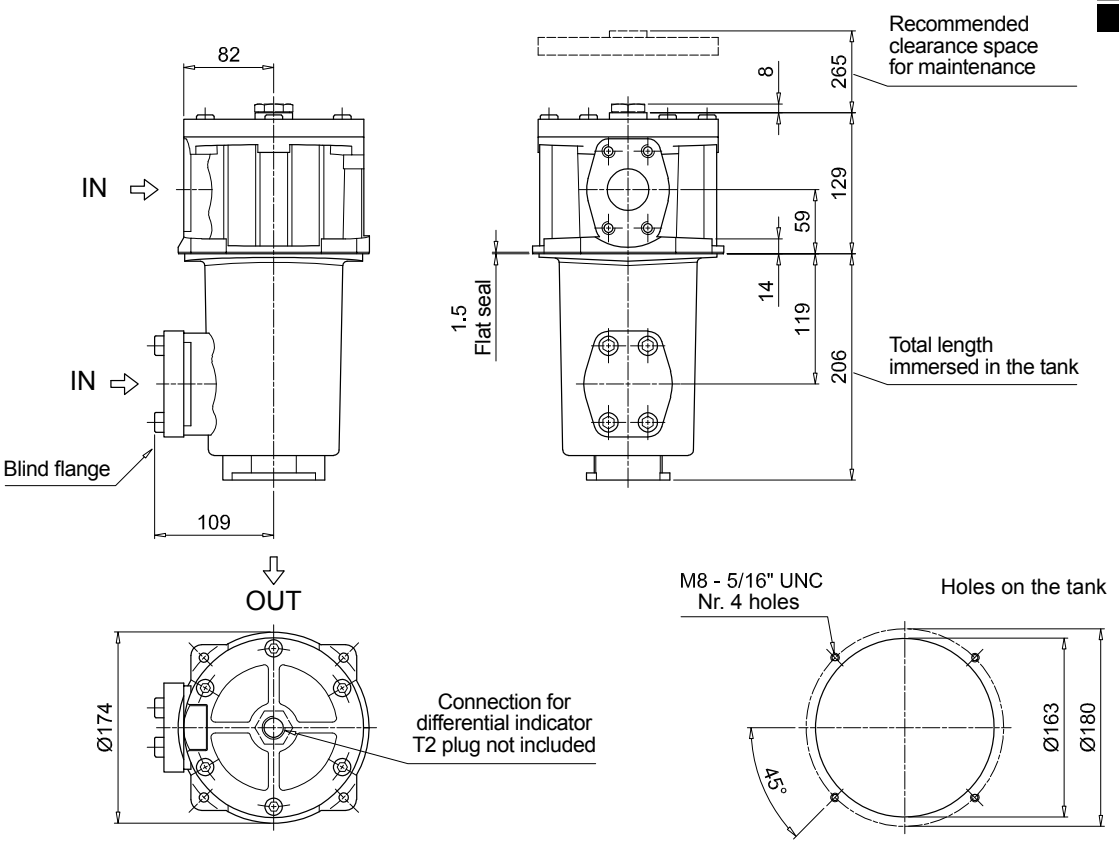

FRI630
Threaded connections "G"

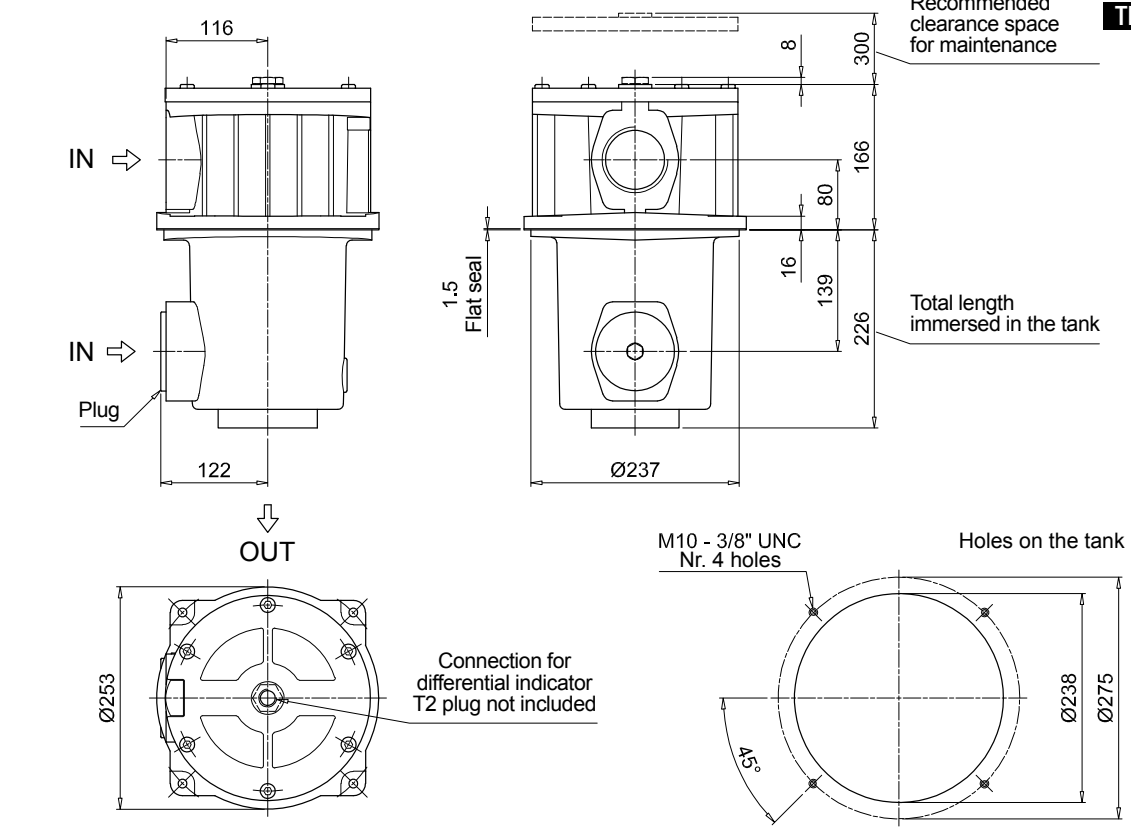

FRI630
Flange connections "F"

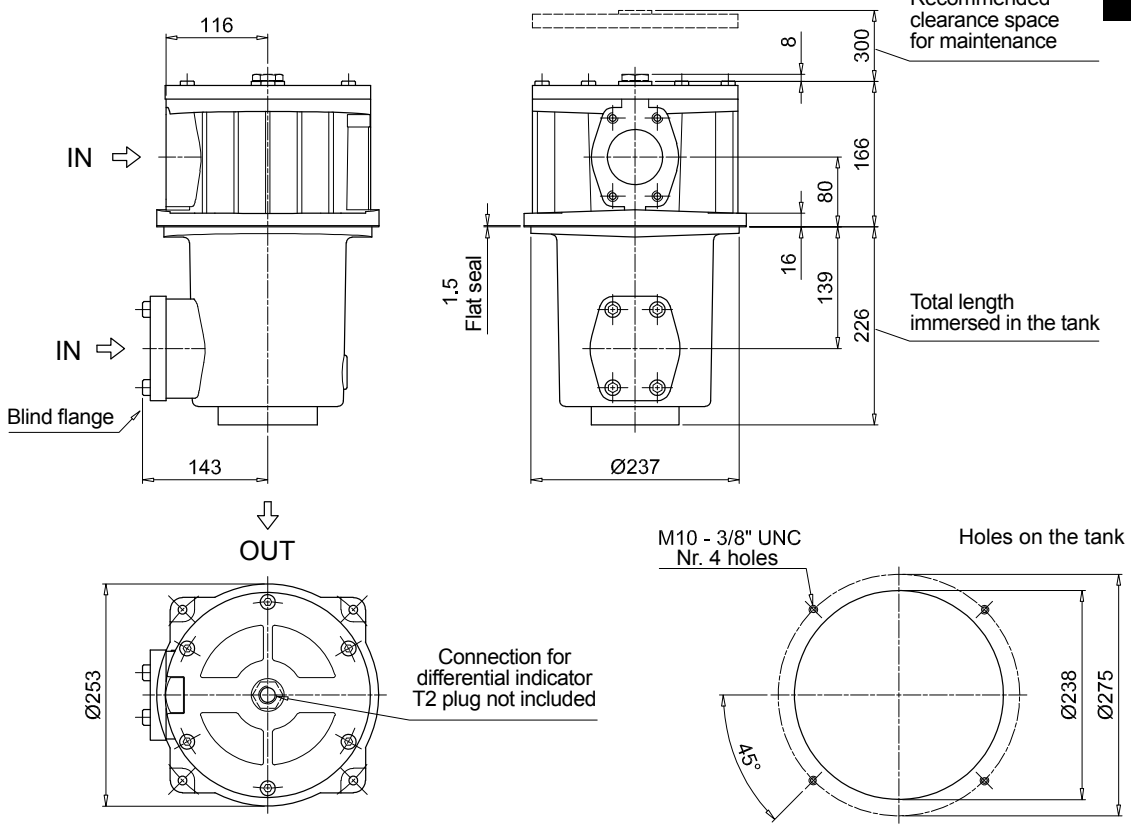

Designation & Ordering code

COMPLETE FILTER

Configuration example 1:	FRI255	S	V	F2	M25	N	P01
Configuration example 2:	FRI850	B	A	F1	A25	V	P01

Series and size
- **FRI255**
- **FRI850**

Bypass valve
- **B** With bypass 2.4 bar
- **S** Without bypass

Seals for FRI255
- **A** NBR
- **V** FPM

Seals and treatments for FRI850		Axx	Mxx	Pxx
A NBR		•	•	•
V FPM		•	•	•
W NBR head anodized	filter element compatible with fluids HFA-HFB-HFC	•	•	-
Z FPM head anodized	filter element compatible with fluids HFA-HFB-HFC	•	•	-

Filtration rating

Connections for FRI255
- **G1** G 1 1/2"
- **G2** 1 1/2" NPT
- **G3** SAE 24 - 1 7/8" - 12 UN
- **G4** G 1 1/4"
- **G5** 1 1/4" NPT
- **G6** SAE 20 - 1 5/8" - 12 UN
- **F1** 1 1/2" SAE 3000 psi/M
- **F2** 1 1/2" SAE 3000 psi/UNC

Connections for FRI850
- **F1** 3 1/2" SAE 3000 psi/M
- **F2** 3 1/2" SAE 3000 psi/UNC

Filtration rating (filter media)
- **A03** Inorganic microfiber 3 µm
- **A06** Inorganic microfiber 6 µm
- **A10** Inorganic microfiber 10 µm
- **A16** Inorganic microfiber 16 µm
- **A25** Inorganic microfiber 25 µm
- **M25** Wire mesh 25 µm
- **M60** Wire mesh 60 µm
- **M90** Wire mesh 90 µm
- **P10** Resin impregnated paper 10 µm
- **P25** Resin impregnated paper 25 µm

Element Δp
- **N** 10 bar

Execution
- **P01** MP Filtri standard
- **Pxx** Customized

Only for FRI850: All filter media except M60, P10 and P25 are compatible with fluids HFA, HFB and HFC.

FILTER ELEMENT

Configuration example 1:	CU250	M25	V	P01
Configuration example 2:	CU850	A25	N	P01

Element series and size
- **CU250**
- **CU850**

Filtration rating (filter media)
- **A03** Inorganic microfiber 3 µm
- **A06** Inorganic microfiber 6 µm
- **A10** Inorganic microfiber 10 µm
- **A16** Inorganic microfiber 16 µm
- **A25** Inorganic microfiber 25 µm
- **M25** Wire mesh 25 µm
- **M60** Wire mesh 60 µm
- **M90** Wire mesh 90 µm
- **P10** Resin impregnated paper 10 µm
- **P25** Resin impregnated paper 25 µm

Seals for FRI255
- **N** NBR
- **V** FPM

Seals and treatments for FRI850		Axx	Mxx	Pxx
N NBR		•	•	•
V FPM		•	•	•
W NBR head anodized	filter element compatible with fluids HFA-HFB-HFC	•	•	-
Z FPM head anodized	filter element compatible with fluids HFA-HFB-HFC	•	•	-

Filtration rating

Execution
- **P01** MP Filtri standard
- **Pxx** Customized

FRI255 CLOGGING INDICATORS

See page 266

- **BVA** Axial pressure gauge
- **BVR** Radial pressure gauge
- **BVP** Visual pressure indicator with automatic reset
- **BVQ** Visual pressure indicator with manual reset
- **BEA** Electrical pressure indicator
- **BEM** Electrical pressure indicator
- **BLA** Electrical / visual pressure indicator

FRI850 CLOGGING INDICATORS

See page 266

- **DEA** Electrical differential indicator
- **DEM** Electrical differential indicator
- **DLA** Electrical / visual differential indicator
- **DLE** Electrical / visual differential indicator
- **DTA** Electrical differential indicator
- **DVA** Visual differential indicator
- **DVM** Visual differential indicator

Additional features See page 276

- **T2** Plug

FRI255

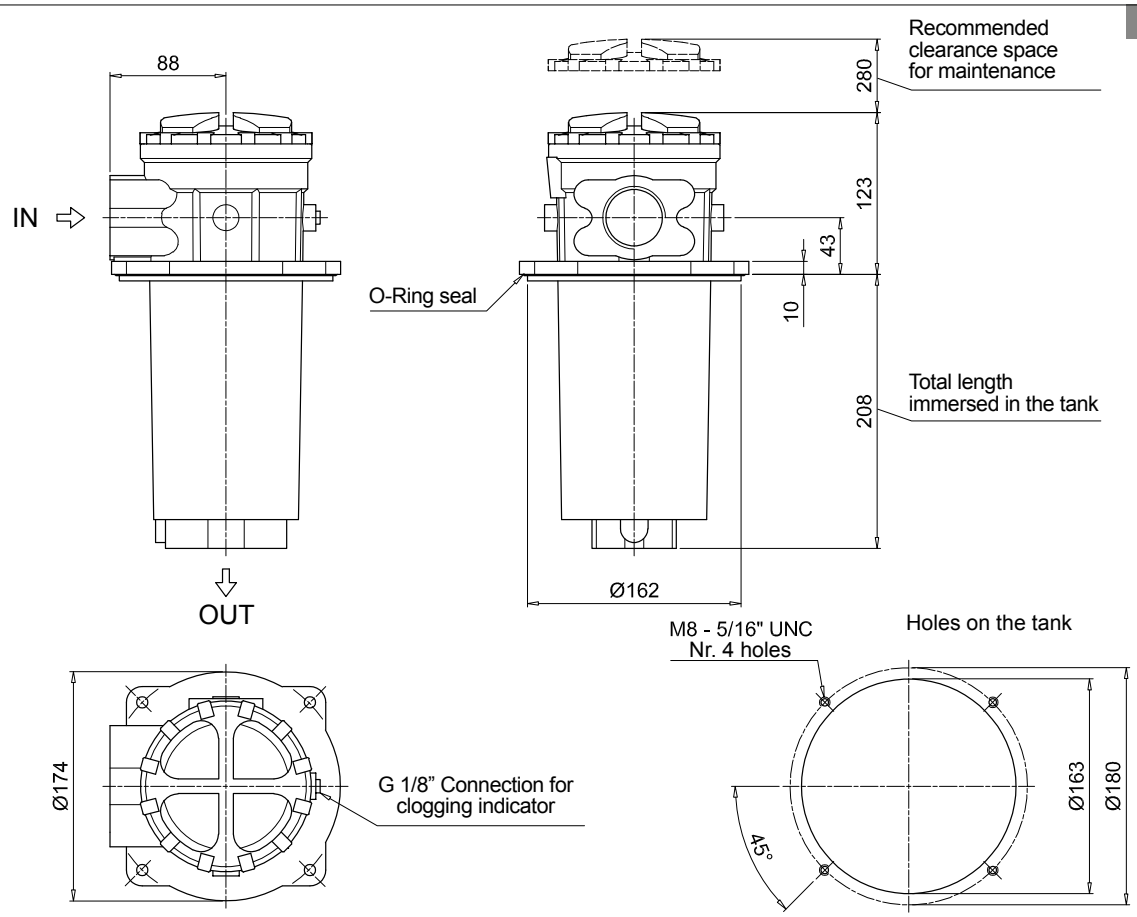

FRI850

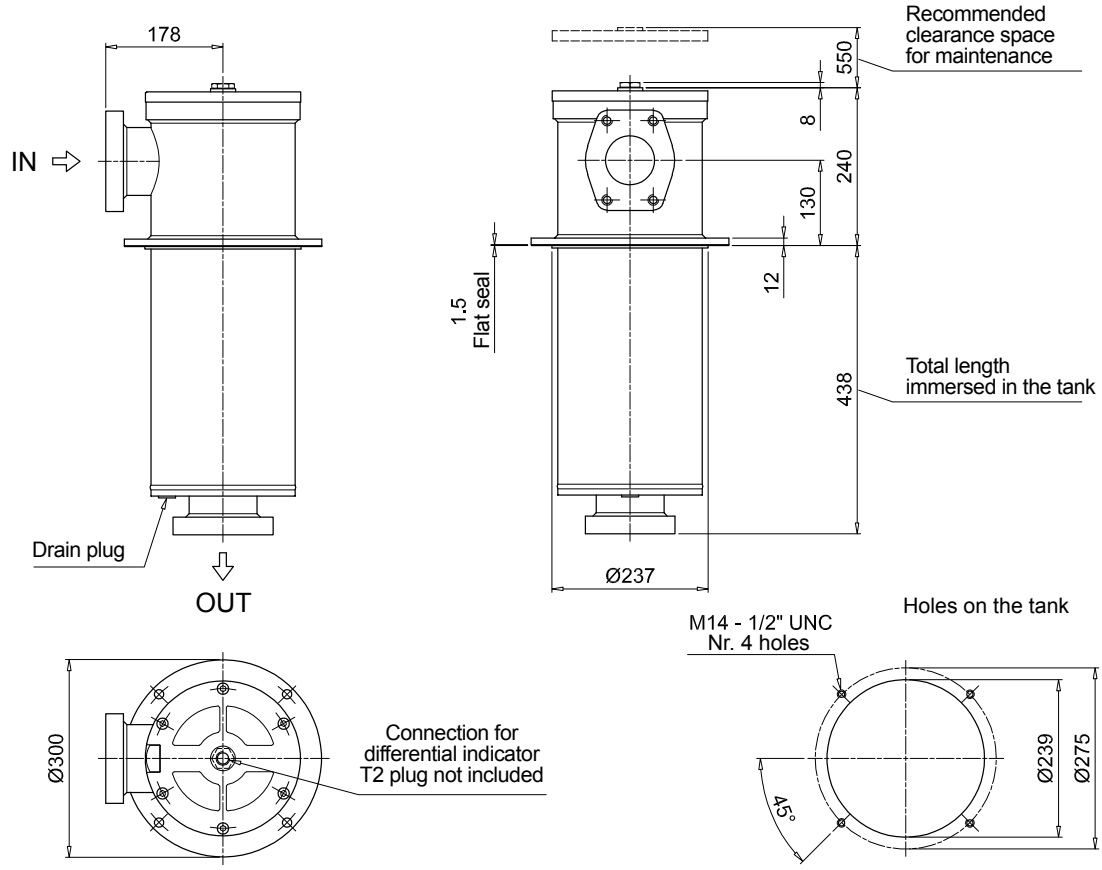

Order number for spare parts

FRI 025 - 040

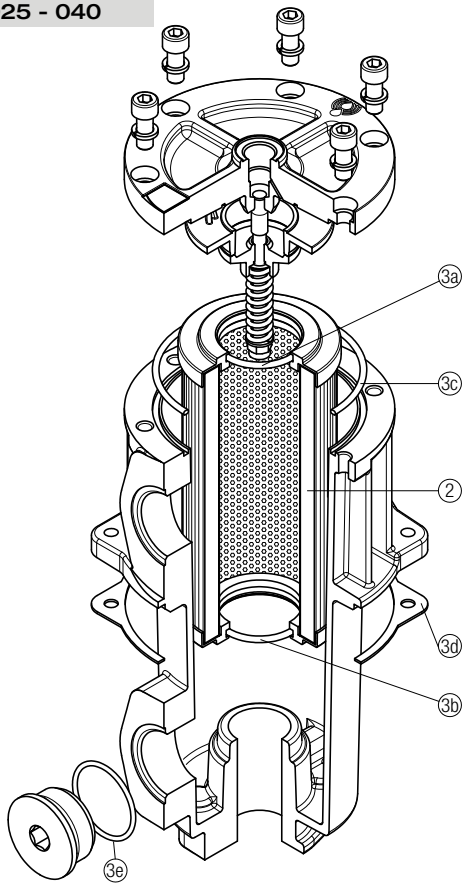

Item:	Q.ty: 1 pc. 2	Q.ty: 1 pc. 3 (3a ÷ 3e)	
Filter series	Filter element	Seal Kit code number NBR	FPM
FRI 025	See order table	02050213	02050220
FRI 040		02050214	02050221

FRI 100 - 250 - 630

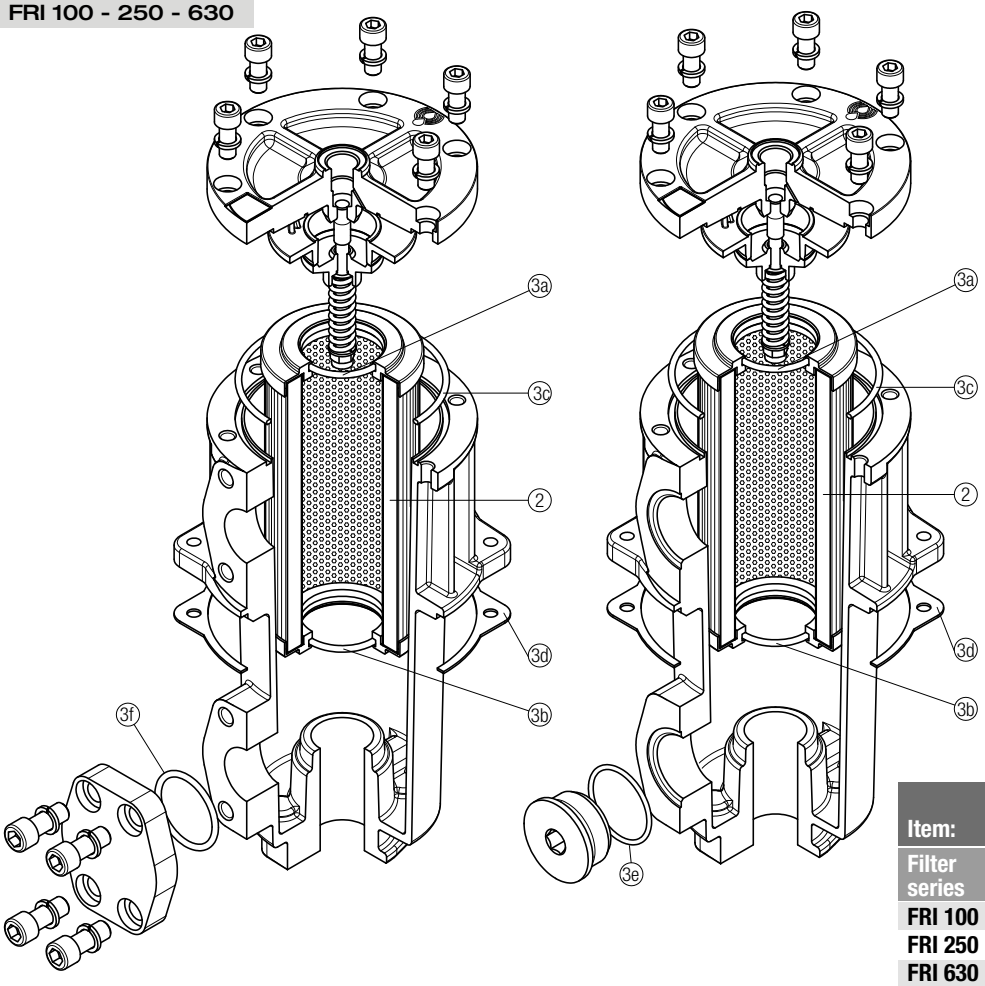

Item:	Q.ty: 1 pc. 2	Q.ty: 1 pc. 3 (3a ÷ 3f)	
Filter series	Filter element	Seal Kit code number NBR	FPM
FRI 100	See order table	02050215	02050222
FRI 250		02050216	02050223
FRI 630		02050217	02050224

Order number for spare parts

FRI 255

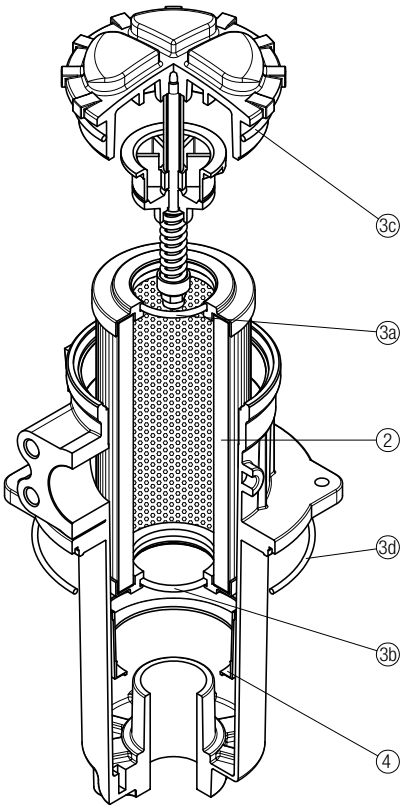

Item:	Q.ty: 1 pc. 2	Q.ty: 1 pc. 3 (3a ÷ 3d)		Q.ty: 1 pc. 4
Filter series	Filter element	Seal Kit code number NBR	FPM	Contamination retainer binder
FRI 255	See order table	02050013	02050014	01060301

FRI 850

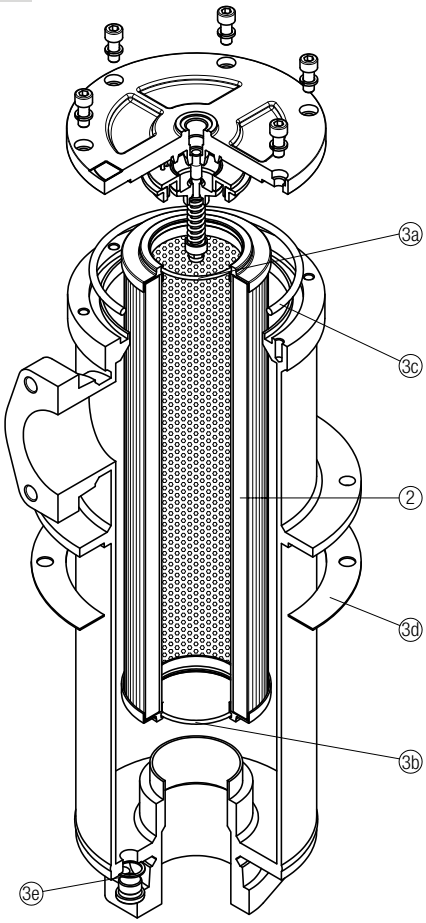

Item:	Q.ty: 1 pc. 2	Q.ty: 1 pc. 3 (3a ÷ 3e)	
Filter series	Filter element	Seal Kit code number NBR	FPM
FRI 850	See order table	02050218	02050225

Clogging indicators

Introduction

Filter elements are efficient only if their Dirt Holding Capacity is fully exploited. This is achieved by using filter housings equipped with clogging indicators.

These devices trip when the clogging of the filter element causes an increase in pressure drop across the filter element.

The indicator is set to alarm before the element becomes fully clogged.

MP Filtri can supply indicators of the following designs:

- **Vacuum switches and gauges**
- **Pressure switches and gauges**
- **Differential pressure indicators**

These type of devices can be provided with a visual, electrical or both signals.

Suitable indicator types

BAROMETRIC INDICATORS
Pressure indicators are used on the Return line to check the efficiency of the filter element.
They measure the pressure upstream of the filter element.
Standard items are produced with R 1/8” EN 10226 connection.

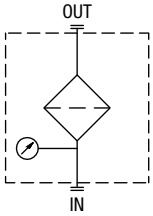

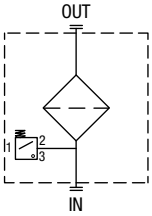

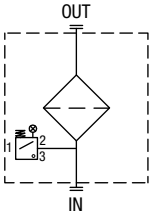

DIFFERENTIAL INDICATORS
Differential indicators are used on the Pressure line to check the efficiency of the filter element.
They measure the pressure upstream and downstream of the filter element (differential pressure).
Standard items are produced with special connection G 1/2” size.
Also available in Stainless Steel models.

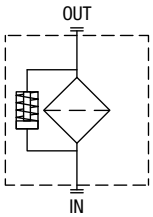

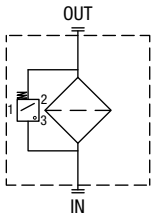

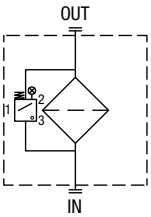

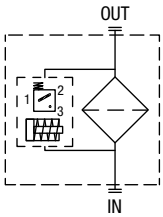

Quick reference guide

Filter family	Filter series		Visual indicators	Electrical indicators	Electrical / Visual indicators
RETURN FILTERS	With bypass 1.75 bar	ELIXIR® RFEX060-080-110-160	BVA14P01 BVR14P01 BVP15HP01 BVQ15HP01	BEA15HA50P01 BEM15HA41P01	BLA15HA51P01 BLA15HA52P01 BLA15HA53P01 BLA15HA71P01
	Without bypass	ELIXIR® RFEX060-080-110-160	BVA25P01 BVR25P01 BVP20HP01 BVQ20HP01	BEA20HA50P01 BEM20HA41P01	BLA20HA51P01 BLA20HA52P01 BLA20HA53P01 BLA20HA71P01
	With bypass 1.75 bar	MDH 250	BVA14P01 BVR14P01 BVP15HP01 BVQ15HP01 DVS12HP01	BEA15HA50P01 BEM15HA41P01 DES12HA10P01 DES12HA30P01 DES12HA80P01	BLA15HA51P01 BLA15HA52P01 BLA15HA53P01 BLA15HA71P01
	With bypass 3 bar	MDH 250	BVA25P01 BVR25P01 BVP20HP01 BVQ20HP01 DVS25HP01	BEA20HA50P01 BEM20HA41P01 DES25HA10P01 DES25HA30P01 DES25HA80P01	BLA20HA51P01 BLA20HA52P01 BLA20HA53P01 BLA20HA71P01
	With bypass 1.75 bar	MPFX MPTX MPF MPT MPH	BVA14P01 BVR14P01 BVP15HP01 BVQ15HP01	BEA15HA50P01 BEM15HA41P01	BLA15HA51P01 BLA15HA52P01 BLA15HA53P01 BLA15HA71P01
	With bypass 3 bar	MPFX MPTX MPF MPT	BVA25P01 BVR25P01 BVP20HP01 BVQ20HP01	BEA20HA50P01 BEM20HA41P01	BLA20HA51P01 BLA20HA52P01 BLA20HA53P01 BLA20HA71P01
	With bypass 2.5 bar	MPH			
	With bypass 4.5 bar	MPLX	DVA20xP01 DVM20xP01	DEA20xA50P01 DEM20XX10P01 DEM20XX20P01 DEM20XX30P01 DEM20XX35P01 DTA20xF70P01	DLA20xA51P01 DLA20xA52P01 DLA20xA71P01 DLE20xA50P01 DLE20xF50P01
	With bypass 2.4 bar	FRI			

BAROMETRIC INDICATORS

Dimensions

BEA*50

Electrical Pressure Indicator

Settings	Ordering code
1.5 bar ±10%	BE A 15 H A 50 P01
2.0 bar ±10%	BE A 20 H A 50 P01

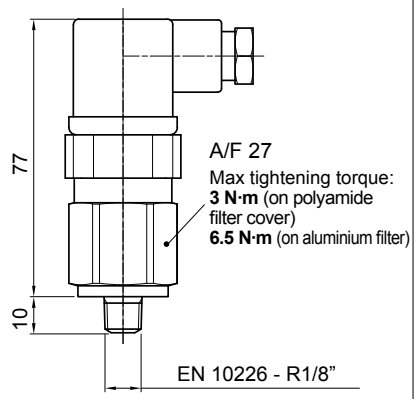

Hydraulic symbol

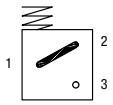

Electrical symbol

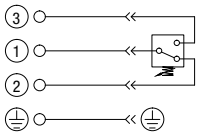

Materials
- Body: Brass
- Base: Black polyamide
- Contacts: Silver
- Seal: HNBR

Technical data
- Max working pressure: 40 bar
- Proof pressure: 60 bar
- Working temperature: From -25 °C to +80 °C
- Compatibility with fluids: Mineral oils, Synthetic fluids HFA, HFB, HFC according to ISO 2943
- Degree of protection: IP65 according to EN 60529

Electrical data
- Electrical connection: EN 175301-803
- Resistive load: 5 A / 14 Vdc; 4 A / 30 Vdc; 5 A / 125 Vac; 4 A / 250 Vac
- Available ATEX product: I M1 Ex ia I Ma; II 1GD Ex ia IIC TX Ga Ex ia IIIC TX °C Da
- CE certification

BEM*41

Electrical Pressure Indicator

Settings	Ordering code
1.5 bar ±10%	BE M 15 H A 41 P01
2.0 bar ±10%	BE M 20 H A 41 P01

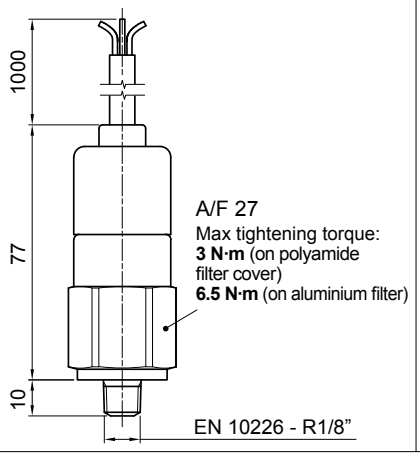

Hydraulic symbol

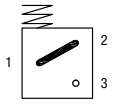

Electrical symbol

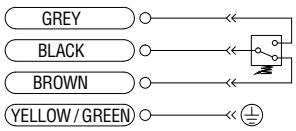

Materials
- Body: Brass
- Base: Black polyamide
- Contacts: Silver
- Seal: HNBR

Technical data
- Max working pressure: 40 bar
- Proof pressure: 60 bar
- Working temperature: From -25 °C to +80 °C
- Compatibility with fluids: Mineral oils, Synthetic fluids HFA, HFB, HFC according to ISO 2943
- Degree of protection: IP67 according to EN 60529

Electrical data
- Electrical connection: Four-core cable
- Resistive load: 5 A / 14 Vdc; 4 A / 30 Vdc; 5 A / 125 Vac; 4 A / 250 Vac
- CE certification

On request this indicator can be provided with main connectors in use for wirings.

BL*51 - BL*52 - BL*53

Electrical/Visual Pressure Indicator

Settings	Ordering code
1.5 bar ±10%	BL A 15 H A xx P01
2.0 bar ±10%	BL A 20 H A xx P01

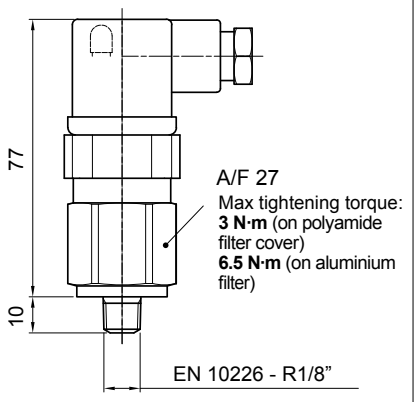

Hydraulic symbol

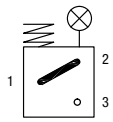

Electrical symbol

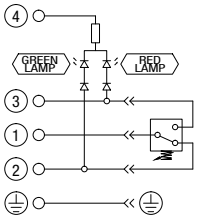

Materials
- Body: Brass
- Base: Transparent polyamide
- Contacts: Silver
- Seal: HNBR

Technical data
- Max working pressure: 40 bar
- Proof pressure: 60 bar
- Working temperature: From -25 °C to +80 °C
- Compatibility with fluids: Mineral oils, Synthetic fluids HFA, HFB, HFC according to ISO 2943
- Degree of protection: IP65 according to EN 60529

Electrical data
- Electrical connection: EN 175301-803

- Type	51	52	53
- Lamps	24 Vdc	110 Vdc	230 Vac
- Resistive load:	1 A / 24 Vdc	1 A / 110 Vdc	1 A / 230 Vac

BL*71

Electrical/Visual Pressure Indicator

Settings	Ordering code
1.5 bar ±10%	BL A 15 H A 71 P01
2.0 bar ±10%	BL A 20 H A 71 P01

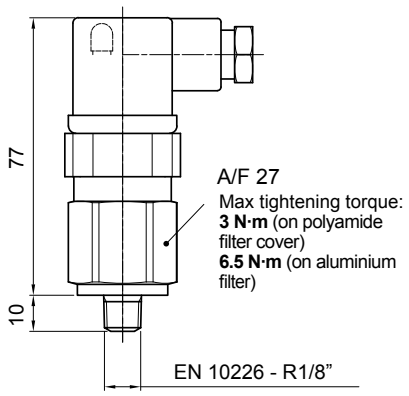

Hydraulic symbol

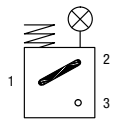

Electrical symbol

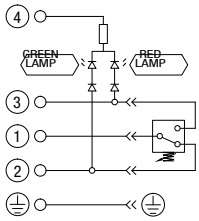

Materials
- Body: Brass
- Base: Black polyamide
- Contacts: Silver
- Seal: HNBR

Technical data
- Max working pressure: 40 bar
- Proof pressure: 60 bar
- Working temperature: From -25 °C to +80 °C
- Compatibility with fluids: Mineral oils, Synthetic fluids HFA, HFB, HFC according to ISO 2943
- Degree of protection: IP65 according to EN 60529

Electrical data
- Electrical connection: IEC 61076-2-101 D (M12)
- Lamps: 24 Vdc
- Resistive load: 0.4 A / 24 Vdc

BVA

Axial Pressure Gauge

Settings	Ordering code
1.4 bar ±10%	BV A 14 P01
2.5 bar ±10%	BV A 25 P01

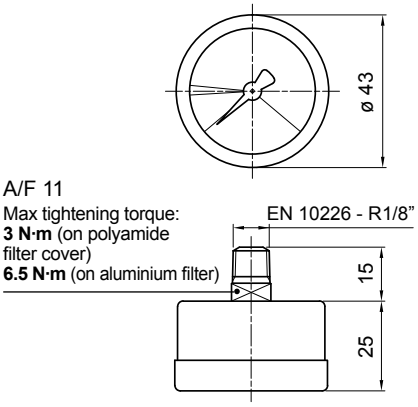

Hydraulic symbol

Dial scale

BV A 14 P01

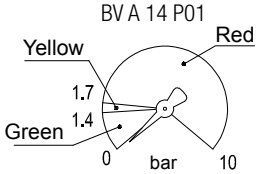

BV A 25 P01

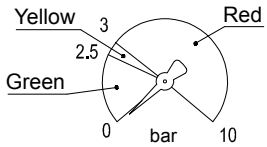

Materials
- Case: Painted Steel
- Window: Transparent plastic
- Dial: Painted Steel
- Pointer: Painted Aluminium
- Pressure connection: Brass
- Pressure element: Bourdon tube Cu-alloy soft soldered

Technical data
- Max working pressure: Static: 7 bar Fluctuating: 6 bar Short time: 10 bar
- Working temperature: From -40 °C to +60 °C
- Compatibility with fluids: Mineral oils, Synthetic fluids HFA, HFB, HFC according to ISO 2943
- Accuracy: Class 2.5 according to EN 13190
- Degree of protection: IP31 according to EN 60529

BVR

Radial Pressure Gauge

Settings	Ordering code
1.4 bar ±10%	BV R 14 P01
2.5 bar ±10%	BV R 25 P01

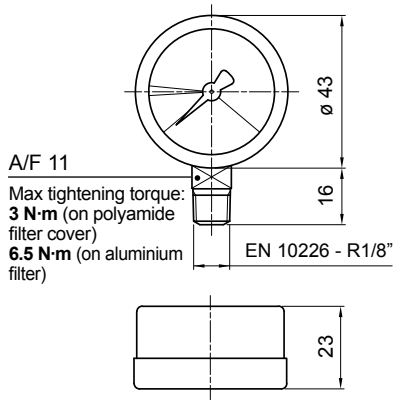

Hydraulic symbol

Dial scale

BV R 14 P01

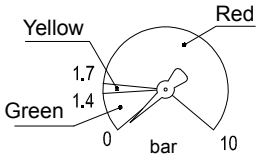

BV R 25 P01

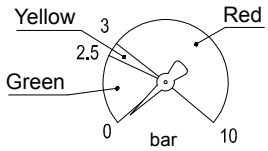

Materials
- Case: Painted Steel
- Window: Transparent plastic
- Dial: Painted Steel
- Pointer: Painted Aluminium
- Pressure connection: Brass
- Pressure element: Bourdon tube Cu-alloy soft soldered

Technical data
- Max working pressure: Static: 7 bar Fluctuating: 6 bar Short time: 10 bar
- Working temperature: From -40 °C to +60 °C
- Compatibility with fluids: Mineral oils, Synthetic fluids HFA, HFB, HFC according to ISO 2943
- Accuracy: Class 2.5 according to EN 13190
- Degree of protection: IP31 according to EN 60529

Dimensions

BVP - BVQ

Visual Pressure Indicator

Setting	Ordering code
1.5 bar ±10%	BV P 15 H P01
	BV Q 15 H P01
2.0 bar ±10%	BV P 20 H P01
	BV Q 20 H P01

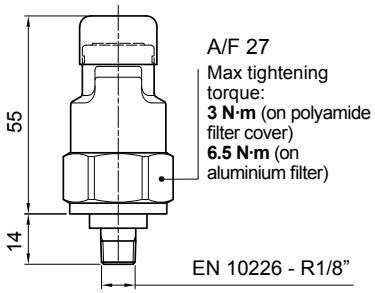

Hydraulic symbol

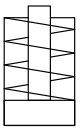

Materials

- Body: Brass
- Cover / internal parts: Polyamide
- Caps: VMQ
- Seal: HNBR

Technical data

- Reset: BVP - Automatic reset
  BVQ - Manual reset
- Max working pressure: 10 bar
- Proof pressure: 15 bar
- Working temperature: From -25 °C to +80 °C
- Compatibility with fluids: Mineral oils, Synthetic fluids
  HFA, HFB, HFC according to ISO 2943
- Degree of protection: IP45 according to EN 60529

Signals

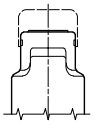

Absence of pressure
(no indicator)

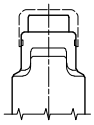

Presence of pressure
(green button rises gradually)

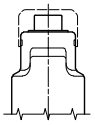

Clogged filter element
(red button risen)

DESIGNATION & ORDERING CODE

Configuration example 1:	BE	M	15	H	A	41	P01
Configuration example 2:	BL	A	20	H	A	71	P01
Configuration example 3:	BV	R	14				P01
Configuration example 4:	BV	P	20	H			P01

Series

- **BE** Electrical pressure indicator
- **BL** Electrical/Visual pressure indicator
- **BV** Visual pressure indicator

Type	BE	BL
A Standard type	•	•
M With wired electrical connection	•	-

BV	
A	Axial connection pressure gauge
R	Radial connection pressure gauge
P	Visual indicator with automatic reset
Q	Visual indicator with manual reset

Pressure setting	BEA-BEM	BLA	BVA-BVR	BVP-BVQ
14 1.4 bar	-	-	•	-
15 1.5 bar	•	•	-	-
20 2.0 bar	•	•	-	•
25 2.5 bar	-	-	•	-

Seals	BE	BLA	BVA-BVR	BVP-BVQ
H HNBR	•	•	-	•

Thermostat	BEA-BEM	BLA	BV
A Without	•	•	-

Electrical connections	BEA	BEM	BL	BV
41 Connection via four-core cable	-	•	-	-
50 Connection EN 175301-803	•	-	-	-
51 Connection EN 175301-803, transparent base with lamps 24 Vdc	-	-	•	-
52 Connection EN 175301-803, transparent base with lamps 110 Vdc	-	-	•	-
53 Connection EN 175301-803, transparent base with lamps 230 Vdc	-	-	•	-
71 Connection IEC 61076-2-101 D (M12), black base with lamps 24 Vdc	-	-	•	-

Option	
P01	MP Filtri standard
Pxx	Customized

DEA*50

Electrical Differential Indicator

Settings	Ordering code
2.0 bar ±10%	DE A 20 x A 50 P01

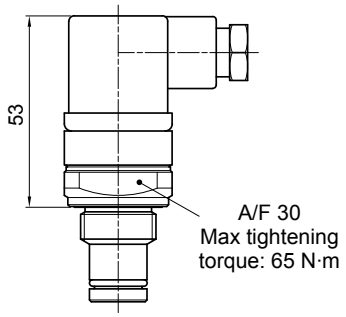

Hydraulic symbol

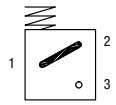

Electrical symbol

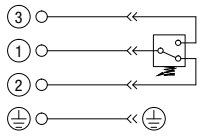

Materials
- Body: Brass
- Base: Black polyamide
- Contacts: Silver
- Seal: HNBR - FPM

Technical data
- Max working pressure: 420 bar
- Proof pressure: 630 bar
- Burst pressure: 1260 bar
- Working temperature: From -25 °C to +110 °C
- Compatibility with fluids: Mineral oils, Synthetic fluids HFA, HFB, HFC according to ISO 2943
- Degree protection: IP66 according to EN 60529 IP69K according to ISO 20653

Electrical data
- Electrical connection: EN 175301-803
- Resistive load: 0.2 A / 115 Vdc

DEM*10

Electrical Differential Indicator

Settings	Ordering code
2.0 bar ±10%	DE M 20 xx 10 P01

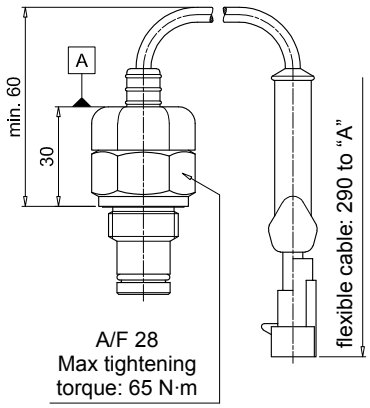

Hydraulic symbol

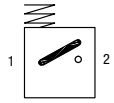

Electrical symbol

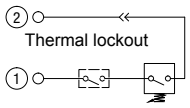

Materials
- Body: Brass
- Base: Black polyamide
- Contacts: Silver
- Seal: HNBR - FPM

Technical data
- Max working pressure: 420 bar
- Proof pressure: 630 bar
- Burst pressure: 1260 bar
- Working temperature: From -25 °C to +110 °C
- Compatibility with fluids: Mineral oils, Synthetic fluids HFA, HFB, HFC according to ISO 2943
- Degree protection: IP66 according to EN 60529

Electrical data
- Electrical connection: AMP Superseal series 1.5
- Resistive load: 0.2 A / 115 Vdc
- Switching type: Normally open contacts (NC on request)
- Thermal lockout: Normally open up to 30 °C (option "F")

DEM*20

Electrical Differential Indicator

Settings	Ordering code
2.0 bar ±10%	DE M 20 xx 20 P01

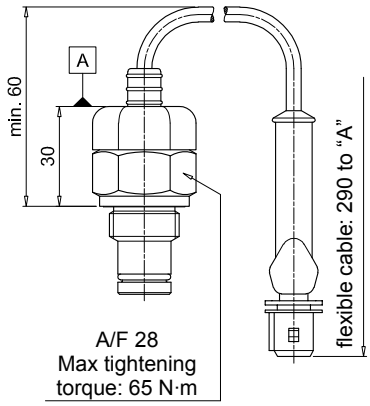

Hydraulic symbol

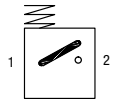

Electrical symbol

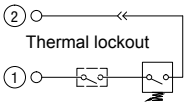

Materials
- Body: Brass
- Base: Black polyamide
- Contacts: Silver
- Seal: HNBR - FPM

Technical data
- Max working pressure: 420 bar
- Proof pressure: 630 bar
- Burst pressure: 1260 bar
- Working temperature: From -25 °C to +110 °C
- Compatibility with fluids: Mineral oils, Synthetic fluids HFA, HFB, HFC according to ISO 2943
- Degree protection: IP66 according to EN 60529

Electrical data
- Electrical connection: AMP Time junior
- Resistive load: 0.2 A / 115 Vdc
- Switching type: Normally open contacts (NC on request)
- Thermal lockout: Normally open up to 30 °C (option "F")

Dimensions

DEM*30

Electrical Differential Indicator

Settings	Ordering code
2.0 bar ±10%	DE M 20 xx 30 P01

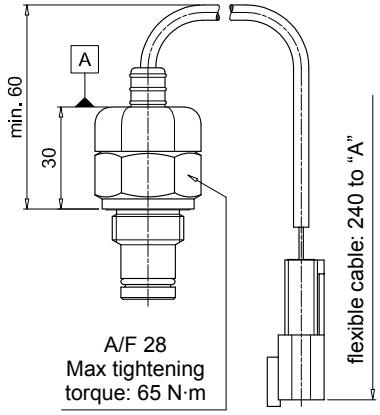

Hydraulic symbol

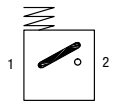

Electrical symbol

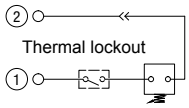

Materials
- Body: Brass
- Base: Black polyamide
- Contacts: Silver
- Seal: HNBR - FPM

Technical data
- Max working pressure: 420 bar
- Proof pressure: 630 bar
- Burst pressure: 1260 bar
- Working temperature: From -25 °C to +110 °C
- Compatibility with fluids: Mineral oils, Synthetic fluids HFA, HFB, HFC according to ISO 2943
- Degree protection: IP66 according to EN 60529

Electrical data
- Electrical connection: Deutsch DT-04-2-P
- Resistive load: 0.2 A / 115 Vdc
- Switching type: Normally open contacts (NC on request)
- Thermal lockout: Normally open up to 30 °C (option "F")

DEM*35

Electrical Differential Indicator

Settings	Ordering code
2.0 bar ±10%	DE M 20 xx 35 P01

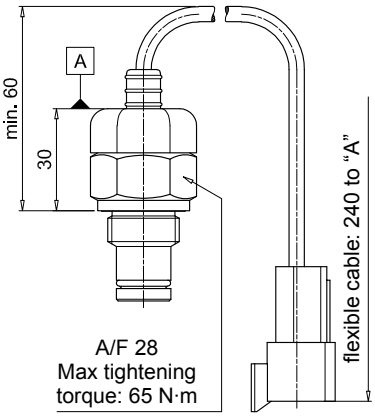

Hydraulic symbol

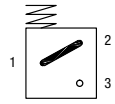

Electrical symbol

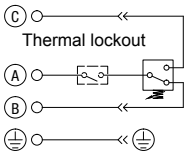

Materials
- Body: Brass
- Base: Black polyamide
- Contacts: Silver
- Seal: HNBR - FPM

Technical data
- Max working pressure: 420 bar
- Proof pressure: 630 bar
- Burst pressure: 1260 bar
- Working temperature: From -25 °C to +110 °C
- Compatibility with fluids: Mineral oils, Synthetic fluids HFA, HFB, HFC according to ISO 2943
- Degree protection: IP66 according to EN 60529

Electrical data
- Electrical connection: Deutsch DT-04-3-P
- Resistive load: 0.2 A / 115 Vdc
- Switching type: SPDT contact
- Thermal lockout: Normally open up to 30 °C (option "F")

DES*10

Electrical Differential Indicator

Settings	Ordering code
1.2 bar ±10%	DE S 12 H A 10 P01
2.5 bar ±10%	DE S 25 H A 10 P01

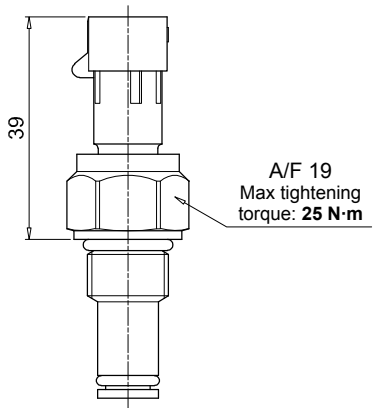

Hydraulic symbol

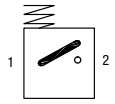

Electrical symbol

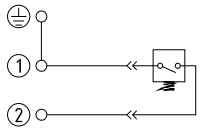

Materials
- Body: Brass
- Internal parts: Brass - Polyamide
- Contacts: Silver
- Seal: HNBR

Technical data
- Max working pressure: 16 bar
- Proof pressure: 24 bar
- Burst pressure: 48 bar
- Working temperature: From -25 °C to +110 °C
- Compatibility with fluids: Mineral oils, Synthetic fluids HFA, HFB, HFC according to ISO 2943
- Degree protection: IP67 according to EN 60529

Electrical data
- Electrical connection: AMP Superseal series 1.5
- Resistive load: 0.2 A / 24 Vdc
- Switching type: Normally open contacts (NC on request)

DES*30

Electrical Differential Indicator

Settings	Ordering code
1.2 bar ±10%	DE S 12 H A 30 P01
2.5 bar ±10%	DE S 25 H A 30 P01

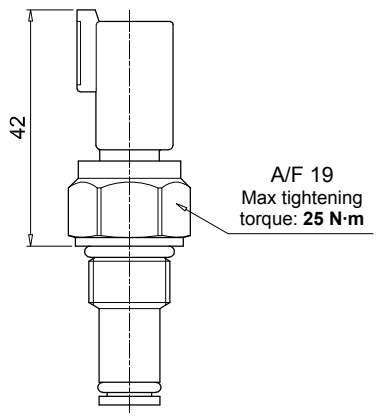

Hydraulic symbol

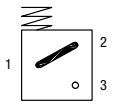

Electrical symbol

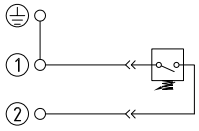

Materials
- Body: Brass
- Internal parts: Brass - Polyamide
- Contacts: Silver
- Seal: HNBR

Technical data
- Max working pressure: 16 bar
- Proof pressure: 24 bar
- Burst pressure: 48 bar
- Working temperature: From -25 °C to +110 °C
- Compatibility with fluids: Mineral oils, Synthetic fluids HFA, HFB, HFC according to ISO 2943
- Degree protection: IP67 according to EN 60529

Electrical data
- Electrical connection: Deutsch DT-04-2-P
- Resistive load: 0.2 A / 24 Vdc
- Switching type: Normally open contacts (NC on request)

DES*80

Electrical Differential Indicator

Settings	Ordering code
1.2 bar ±10%	DE S 12 H A 80 P01
2.5 bar ±10%	DE S 25 H A 80 P01

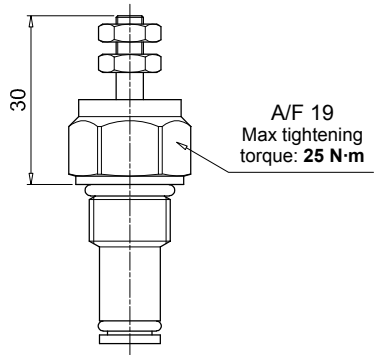

Hydraulic symbol

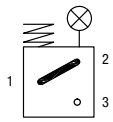

Electrical symbol

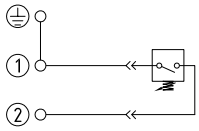

Materials
- Body: Brass
- Internal parts: Brass - Polyamide
- Contacts: Silver
- Seal: HNBR

Technical data
- Max working pressure: 16 bar
- Proof pressure: 24 bar
- Burst pressure: 48 bar
- Working temperature: From -25 °C to +110 °C
- Compatibility with fluids: Mineral oils, Synthetic fluids HFA, HFB, HFC according to ISO 2943
- Degree protection: IP67 according to EN 60529

Electrical data
- Electrical connection: Stud #10-32 UNF
- Resistive load: 0.2 A / 24 Vdc
- Switching type: Normally open contacts (NC on request)

DLA*51 - DLA*52

Electrical/Visual Differential Indicator

Settings	Ordering code
2.0 bar ±10%	DL A 20 x A xx P01

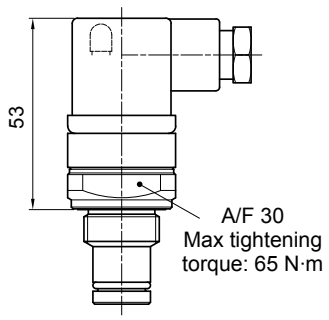

Hydraulic symbol

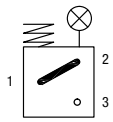

Electrical symbol

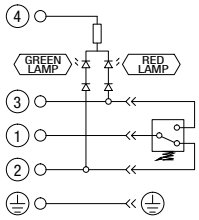

Materials
- Body: Brass
- Base: Transparent polyamide
- Contacts: Silver
- Seal: HNBR - FPM

Technical data
- Max working pressure: 420 bar
- Proof pressure: 630 bar
- Burst pressure: 1260 bar
- Working temperature: From -25 °C to +110 °C
- Compatibility with fluids: Mineral oils, Synthetic fluids HFA, HFB, HFC according to ISO 2943
- Degree protection: IP66 according to EN 60529 IP69K according to ISO 20653

Electrical data
- Electrical connection: EN 175301-803
- Type: 51 / 52
- Lamps: 24 Vdc / 110 Vdc
- Resistive load: 1 A / 24 Vdc / 1 A / 110 Vdc

Dimensions

DLA*71

Electrical/Visual Differential Indicator

Settings	Ordering code
2.0 bar ±10%	DL A 20 x A 71 P01

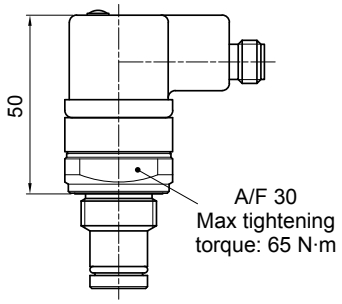

Hydraulic symbol

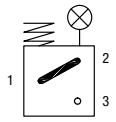

Electrical symbol

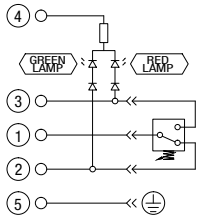

Materials
- Body: Brass
- Base: Black polyamide
- Contacts: Silver
- Seal: HNBR - FPM

Technical data
- Max working pressure: 420 bar
- Proof pressure: 630 bar
- Burst pressure: 1260 bar
- Working temperature: From -25 °C to +110 °C
- Compatibility with fluids: Mineral oils, Synthetic fluids HFA, HFB, HFC according to ISO 2943
- Degree protection: IP65 according to EN 60529 IP69K according to ISO 20653

Electrical data
- Electrical connection: IEC 61076-2-101 D (M12)
- Lamps 24 Vdc
- Resistive load: 0.4 A / 24 Vdc

DLE*A50

Electrical/Visual Differential Indicator

Settings	Ordering code
2.0 bar ±10%	DL E 20 x A 50 P01

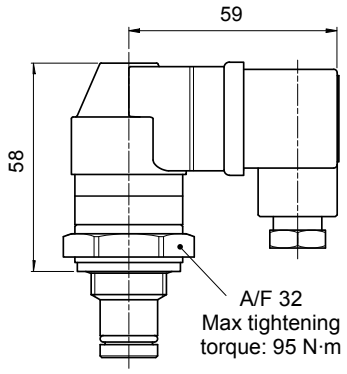

Hydraulic symbol

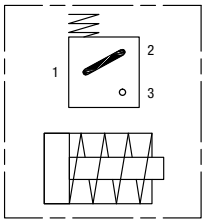

Electrical symbol

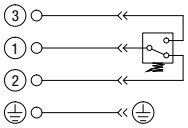

Materials
- Body: Brass
- Base: Black polyamide
- Contacts: Silver
- Seal: HNBR - FPM

Technical data
- Max working pressure: 420 bar
- Proof pressure: 630 bar
- Burst pressure: 1260 bar
- Working temperature: From -25 °C to +110 °C
- Compatibility with fluids: Mineral oils, Synthetic fluids HFA, HFB, HFC according to ISO 2943
- Degree protection: IP65 according to EN 60529

Electrical data
- Electrical connections: EN 175301-803
- Resistive load: 5 A / 250 Vac
- Available the connector with lamps

DLE*F50

Electrical/Visual Differential Indicator

Settings	Ordering code
2.0 bar ±10%	DL E 20 x F 50 P01

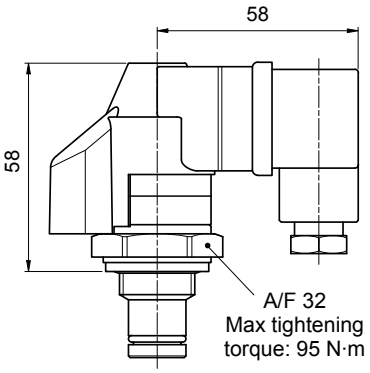

Hydraulic symbol

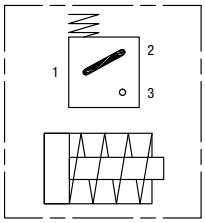

Electrical symbol

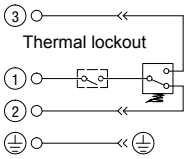

Materials
- Body: Brass
- Base: Black polyamide
- Contacts: Silver
- Seal: HNBR - FPM

Technical data
- Max working pressure: 420 bar
- Proof pressure: 630 bar
- Burst pressure: 1260 bar
- Working temperature: From -25 °C to +110 °C
- Compatibility with fluids: Mineral oils, Synthetic fluids HFA, HFB, HFC according to ISO 2943
- Degree protection: IP65 according to EN 60529

Electrical data
- Electrical connections: EN 175301-803
- Resistive load: 5 A / 250 Vac
- Thermal lockout setting: +30 °C

DTA*70

Electrical Differential Indicator

Settings	Ordering code
2.0 bar ±10%	DT A 20 x x 70 P01

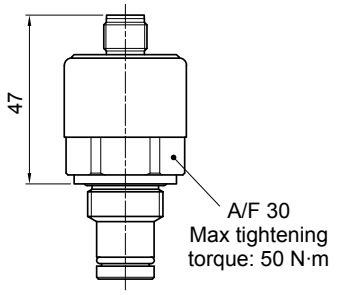

Hydraulic symbol

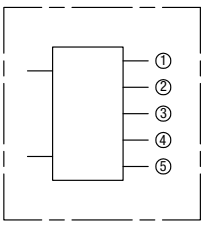

Electrical symbol

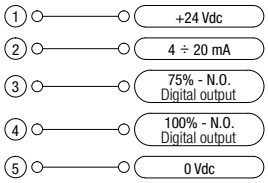

Materials
- Body: Brass
- Internal parts: Brass - Nylon
- Contacts: Silver
- Seal: HNBR - FPM

Industry 4.0 READY

Technical data
- Max working pressure: 420 bar
- Proof pressure: 630 bar
- Burst pressure: 1260 bar
- Compatibility with fluids: Mineral oils, Synthetic fluids HFA, HFB, HFC according to ISO 2943
- Degree protection: IP67 according to EN 60529

Electrical data
- Electrical connection: IEC 61076-2-101 D (M12)
- Power supply: 24 Vdc
- Analogue output: From 4 to 20 mA
- Thermal lockout: 30 °C (all output signals stalled up to 30 °C)

DVA

Visual Differential Indicator

Settings	Ordering code
2.0 bar ±10%	DV A 20 x P01

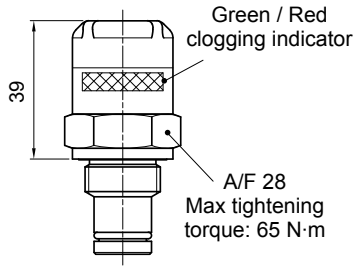

Hydraulic symbol

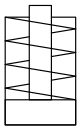

Materials
- Body: Brass
- Internal parts: Brass - Nylon
- Contacts: Silver
- Seal: HNBR - FPM

Technical data
- Reset: Automatic reset
- Max working pressure: 420 bar
- Proof pressure: 630 bar
- Burst pressure: 1260 bar
- Working temperature: From -25 °C to +110 °C
- Compatibility with fluids: Mineral oils, Synthetic fluids HFA, HFB, HFC according to ISO 2943
- Degree protection: IP65 according to EN 60529

DVM

Visual Differential Indicator

Settings	Ordering code
2.0 bar ±10%	DV M 20 x P01

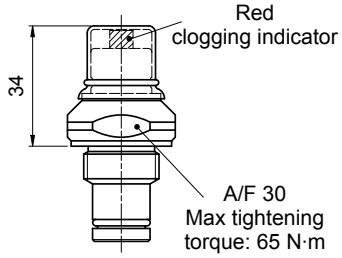

Hydraulic symbol

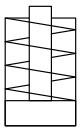

Materials
- Body: Brass
- Internal parts: Brass - Nylon
- Contacts: Silver
- Seal: HNBR - FPM

Technical data
- Reset: Manual reset
- Max working pressure: 420 bar
- Proof pressure: 630 bar
- Burst pressure: 1260 bar
- Working temperature: From -25 °C to +110 °C
- Compatibility with fluids: Mineral oils, Synthetic fluids HFA, HFB, HFC according to ISO 2943
- Degree protection: IP65 according to EN 60529

Dimensions

DVS

Visual Differential Indicator

Settings	Ordering code
1.2 bar ±10%	DV S 12 H P01
2.5 bar ±10%	DV S 25 H P01

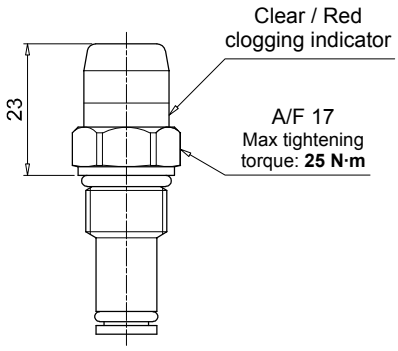

Hydraulic symbol

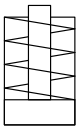

Materials

- Body: Brass
- Internal parts: Brass - Polyamide
- Contacts: Silver
- Seal: HNBR

Technical data

- Reset: Automatic reset
- Max working pressure: 16 bar
- Proof pressure: 24 bar
- Burst pressure: 48 bar
- Working temperature: From -25 °C to +110 °C
- Compatibility with fluids: Mineral oils, Synthetic fluids HFA, HFB, HFC according to ISO 2943
- Degree protection: IP67 according to EN 60529

T2

Indicator plug

Seal	Ordering code
HNBR	T2 H
FPM	T2 V

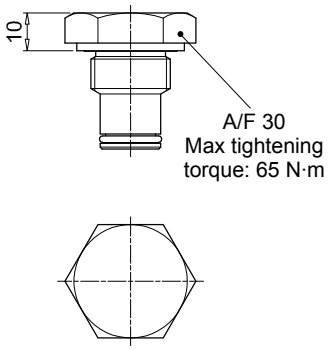

Materials

- Body: Phosphatized steel
- Seal: HNBR / FPM

DESIGNATION & ORDERING CODE - DIFFERENTIAL INDICATORS

Configuration example 1:	DE	M	20	H	F	50	P01
Configuration example 2:	DL	E	20	V	A	71	P01
Configuration example 3:	DT	A	20	H	F	70	P01
Configuration example 4:	DV	M	20	V			P01

Series

DE	Electrical differential indicator
DL	Electrical/Visual differential indicator
DT	Electrical differential indicator
DV	Visual differential indicator

Type	DE	DL	DT
A Standard type	•	•	•
M With wired electrical connection	•	-	-
E For high power supply	-	•	-
S Compact version	•	-	-

DV	
A	With automatic reset
M	With manual reset
S	With automatic reset

Pressure setting	DE	DL	DT	DV
12 1.2 bar	•	-	-	•
20 2.0 bar	•	•	•	•
25 2.5 bar	•	-	-	-

Seals

H	HNBR
V	FPM

Thermostat	DEA	DEM	DLA	DLE	DT	DV
A Without thermostat	•	•	•	•	-	-
F With thermostat	-	•	-	•	•	-

Electrical connections	DEA	DEM	DLA	DLE	DT	DV
10 Connection AMP Superseal series 1.5	-	•	-	-	-	-
20 Connection AMP Timer Junior	-	•	-	-	-	-
30 Connection Deutsch DT-04-2-P	-	•	-	-	-	-
35 Connection Deutsch DT-04-3-P	-	•	-	-	-	-
50 Connection EN 175301-803	•	-	-	•	-	-
51 Connection EN 175301-803, transparent base with lamps 24 Vdc	-	-	•	-	-	-
52 Connection EN 175301-803, transparent base with lamps 110 Vdc	-	-	•	-	-	-
70 Connection IEC 61076-2-101 D (M12)	-	-	-	-	•	-
71 Connection IEC 61076-2-101 D (M12), black base with lamps 24 Vdc	-	-	•	-	-	-

Option

P01	MP Filtri standard
Pxx	Customized

DESIGNATION & ORDERING CODE - DIFFERENTIAL INDICATOR PLUG

Configuration example	T2	H

Series

T2	Indicator plug

Seals

H	HNBR
V	FPM