POWER TRANSMISSION
PRODUCTS

PASSION TO PERFORM

MPFILTRI®

A WORLDWIDE LEADER IN THE FIELD OF HYDRAULIC FILTRATION EQUIPMENT.

Our company started life in 1964, when Bruno Pasotto decided to attempt to cater for the requests of a market still to be fully explored, with the study, design, development, production and marketing of a vast range of filters for hydraulic equipment, capable of satisfying the needs of manufacturers in all sectors. The quality of our products, our extreme competitiveness compared with major international producers and our constant activities of research, design and development has made us a worldwide leader in the field of hydraulic circuit filtering.
Present for over 50 years in the market, we have played a truly decisive role in defining our sector, and by now we are a group capable of controlling our entire chain of production, monitoring all manufacturing processes to guarantee superior quality standards and to provide concrete solutions for the rapidly evolving needs of customers and the market.

MARKET **LEADER**

Our work is based on a skillful interaction between advanced technology and fine workmanship, **customizing products according to specific market requests**, focusing strongly on innovation and quality, and following every step in the manufacturing of both standard and special products, fully respecting customer expectations.

Our customer-oriented philosophy, which enables us to satisfy all customer requests **rapidly** and **with personalized products**, makes us a **dynamic and flexible enterprise**. The possibility of constantly controlling and monitoring the entire production process is essential to allow us to guarantee the quality of our products.

WORLDWIDE PRESENCE

Our foreign Branches enable us to offer a diversified range of products that allow us to successfully face the aggressive challenge of international competition, and also to maintain a stable presence at a local level.

The Group boasts **9** **business branches**

TECHNOLOGY

Our constant **quest for excellence in quality and technological innovation** allows us to offer only the best solutions and services for applications in many fields, including general industry, test rigs, lubrication, heavy engineering, renewable energies, naval engineering, offshore engineering, aviation systems, emerging technologies and mobile plant (i.e. tractors, excavators, concrete pumps, platforms).

AND PRODUCTION

Our high level of technological expertise means **we can rely entirely on our own resources, without resorting to external providers.** This in turn enables us to satisfy a growing number of customer requests, also exploiting our constantly updated range of machines and equipment, featuring **fully-automated workstations** capable of **24-hour production**.

SUCTION FILTERS

Flow rates
up to 875 l/min

Mounting:
- Tank immersed
- In-Line
- In tank with shut off valve
- In tank with flooded suction

RETURN FILTERS

Flow rates
up to 3000 l/min

Pressure
up to 20 bar

Mounting:
- In-Line
- Tank top
- In single and duplex designs

RETURN / SUCTION FILTERS

Flow rates
up to 300 l/min

Pressure
up to 80 bar

Mounting:
- In-Line
- Tank top

SPIN-ON FILTERS

Flow rates
up to 365 l/min

Pressure
up to 35 bar

Mounting:
- In-Line
- Tank top

LOW & MEDIUM PRESSURE FILTERS

Flow rates
up to 3000 l/min

Pressure
up to 80 bar

Mounting:
- In-Line
- Parallel manifold version
- In single and duplex designs

HIGH PRESSURE FILTERS

Flow rates
up to 750 l/min

Pressure from 110 bar
up to 560 bar

Mounting:
- In-Line
- Manifold
- In single and duplex designs

PRODUCT RANGE

MP Filtri can offer a vast and articulated range of products for the global market, suitable for all industrial sectors using hydraulic equipment.

This includes filters (suction, return, return/suction, spin-on, pressure, stainless steel pressure) and structural components (motor/pump bell-housings, transmission couplings, damping rings, foot brackets, aluminium tanks, cleaning covers).

We can provide all the skills and solutions required by the modern hydraulics industry to monitor contamination levels and other fluid conditions.

Mobile filtration units and a full range of accessories allow us to supply everything necessary for a complete service in the hydraulic circuits.

STAINLESS STEEL HIGH PRESSURE FILTERS

Flow rates up to 125 l/min
Pressure from 320 bar
up to 1000 bar

Mounting:
- In-Line
- Manifold
- In single and duplex designs

CONTAMINATION MONITORING PRODUCTS

- Off-line, in-line particle counters
- Off-line bottle sampling products
- Fully calibrated using relevant ISO standards
- A wide range of variants to support fluid types and communication protocols

MOBILE FILTRATION UNITS

Flow rates from 15 l/min
up to 200 l/min

POWER TRANSMISSION PRODUCTS

- Aluminium bell-housings for motors from 0.12 kW to 400 kW
- Couplings in Aluminium Cast Iron - Steel
- Damping rings
- Foot bracket
- Aluminium tanks
- Cleaning covers

TANK ACCESSORIES

- Oil filler and air breather plugs
- Optical and electrical level gauges
- Pressure gauge valve selectors
- Pipe fixing brackets
- Pressure gauges

POWER TRANSMISSION PRODUCTS

INDEX

1 page	INTRODUCTION	
1	COMPANY	
6	PRODUCT RANGE	
10	BELL-HOUSING & COUPLING SIZING	
12	SELECTION SOFTWARE	

14 page	COUPLINGS	
16		General Information
21	SGEG - SGEA - SGES - SGEK - EGE	Flexible half-coupling in aluminium, cast iron and steel
39	AKG	IEC electric motor range from size 63 up to size 225
47	SGDR - EGR	Curved-tooth steel gear coupling

52 page	BELL-HOUSING	
54		General Information
59	LMG	Bell-housing with rectangular flange
71	LMC - LDC	Bell-housing for piston, screw and vane pumps
79	LMS - LDS	Bell-housing - Low Noise
87	MULTI-COMPONENTS	Bell-housing - Multi-components 2 - 3

108 page	ACCESSORIES	
110	ANM A	Damping rings
112	PDM A	Foot brackets
113	MPDR PDMA - MPDR	Damping rods
114	OB	Cleaning covers
119	SE10	Aluminium tanks

BELL-HOUSING & COUPLING SIZING

A GUIDE TO SELECT THE CORRECT BELL-HOUSING AND DRIVE COUPLING

DATA REQUIRED

- Electric motor power/motor size
- Manufacturer and pump type

TO VERIFY:

1 - Pump and motor shaft dimensions (see electric motor data sheet)
2 - Shaft and flange pump (see pump data sheet)

Example:
- Electric motor 2.2 kW - size 100-112
- Atos pump code PFE31 - Shaft 1

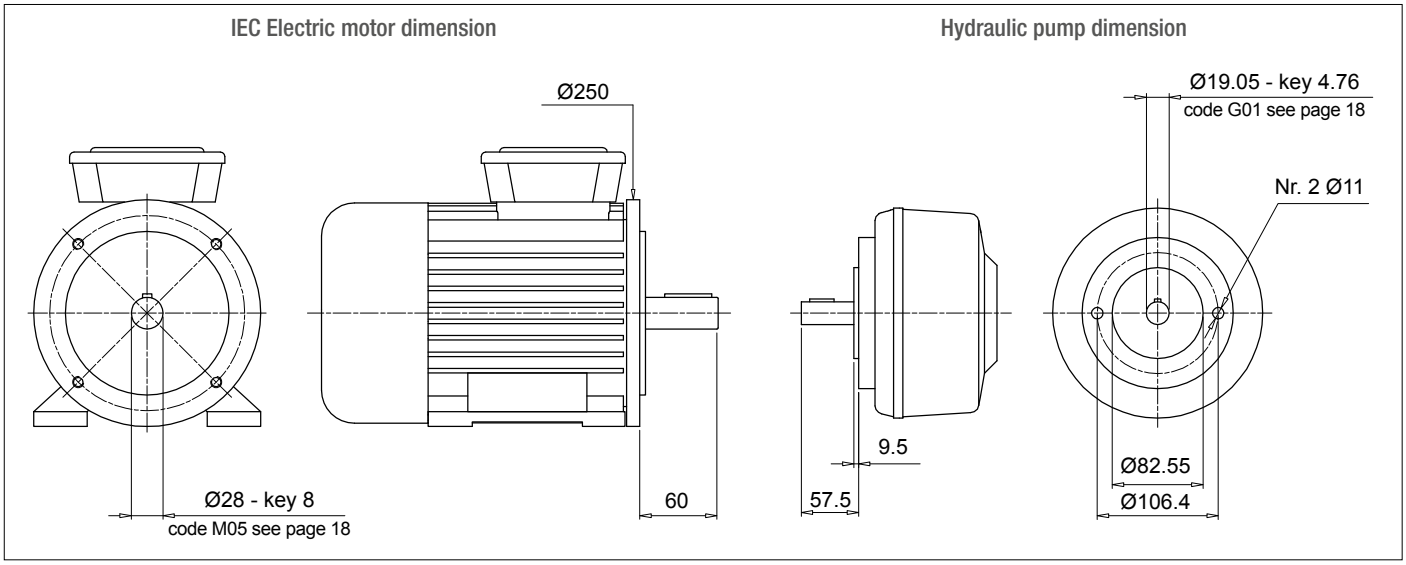

Bell-Housing's length calculation

- H = 60 + 18 + 57.5 = 135.5 mm (18 = Sp spider - see page 31)

- Choose type of bell-housing (LMC - LMS):
  For monobloc bell-housing LMC/LDC series see pages 71 ÷ 77
  For Low noise bell-housing LMS/LDS series see pages 79 ÷ 85
  For Multi-components 2-3 bell housing series see pages 87 ÷ 107

Note:
The length of bell-housing must be ≥ than the length calculated (135.5 mm)

Case A
Solution with monobloc bell-housing series **LMC/LDC**

Pages 71 ÷ 77 for IEC Electric motor size 100-112 - LMC250

LMC 250 bell-housing with height ≥ 135.5 - LMC250AFSQ

The bell-housing code must be completed with pump drilling code (see pages 56-57).
For the specific case:
Spigot hole 82.55 - PCD 106.4 - Nr.2 holes M10 : Drilling code 060

Definitive bell-housing code **LMC250AFSQ060**

Case B
Solution with low noise bell-housing series **LMS/LDS**

Pages 79 ÷ 85 for IEC Electric motor size 100-112 - LMS250

LMS 250 bell-housing with height ≥ 135.5 - LMS250AFSA

The bell-housing code must be completed with pump drilling code (see pages 56-57).
For the specific case:
Spigot hole 82.55 - PCD 106.4 - Nr.2 holes M10 : Drilling code 060

Definitive bell-housing code **LMS250AFSA060**

Coupling selection

Motor half-coupling (see page 26)
For IEC Electric motor size 100/112, the half-coupling is **SGEA21M05060FG**

Spider (see page 31)
For SGEA21, EGE2 - EGE2RR
(choose spider material on the base of the application, oil, temperature and cycle machine, etc.)

Pump half-coupling
Choose the drilling code - see pages 18-19 for shaft 19.05 - key 4.76 - code: **G01**

Pump half-coupling length = BH length - THK Spider - THK Spigot
LMC = 138 mm - 60 - 18 - 9.5 = 50.5 mm
LMS = 148 mm - 60 - 18 - 9.5 = 60.5 mm

LMC - Choose the half-coupling's length at page 26 ≤ 50.5 mm.
LMS - Choose the half-coupling's length at page 26 ≤ 60.5 mm.
LMC - Available length for SGEA21 = 50 mm
LMS - Available length for SGEA21 = 60 mm
Half coupling for LMC: **SGEA21G01050FG**
Half coupling for LMS: **SGEA21G01050FG**

SOFTWARE FOR AUTOMATIC CALCULATION

available on the web site www.mpfiltri.com

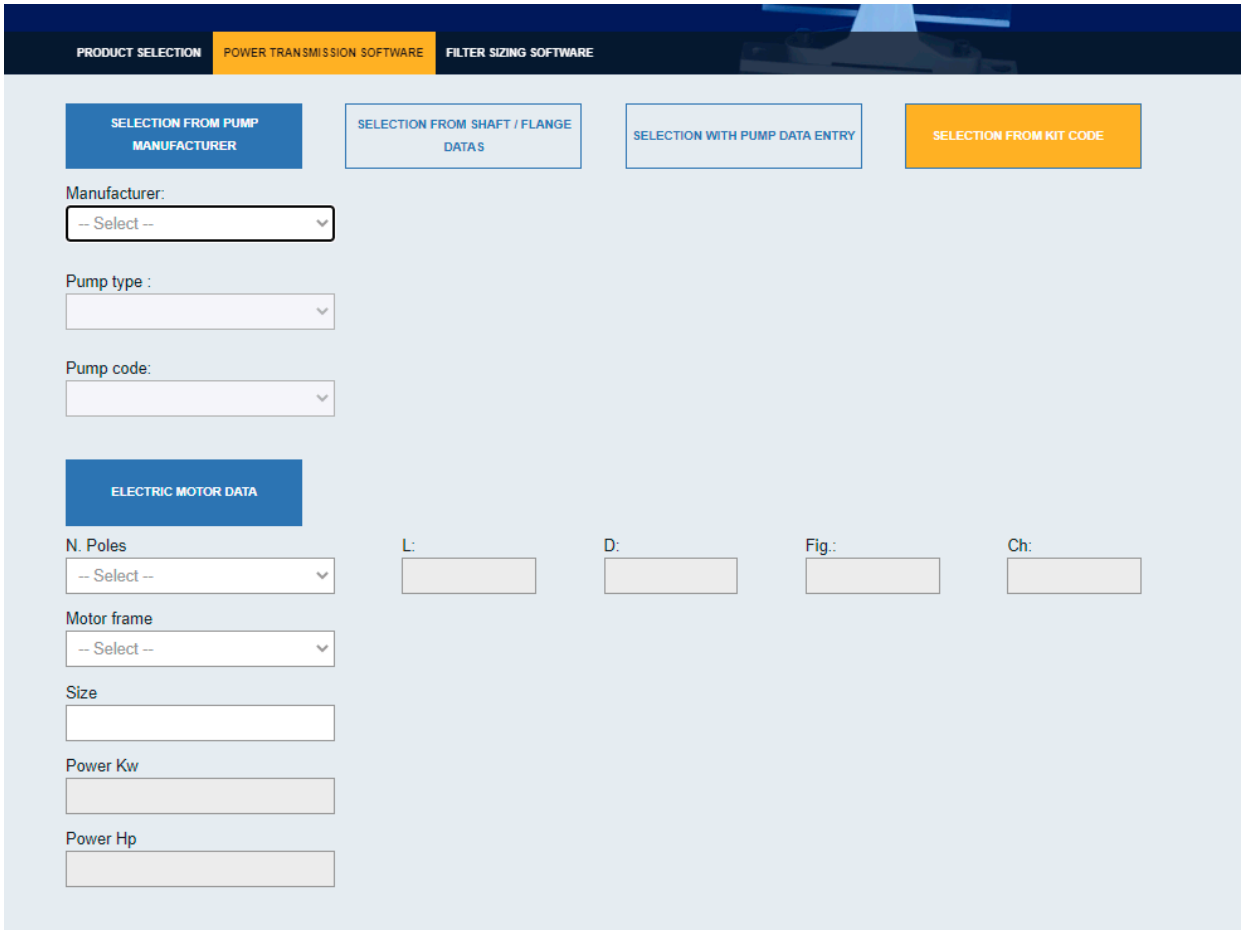

Note: for multi pumps we recommend to use a specific support on the base of the pump's dimensions and weight.

Step (1) Select “POWER TRANSMISSION SOFTWARE” after login

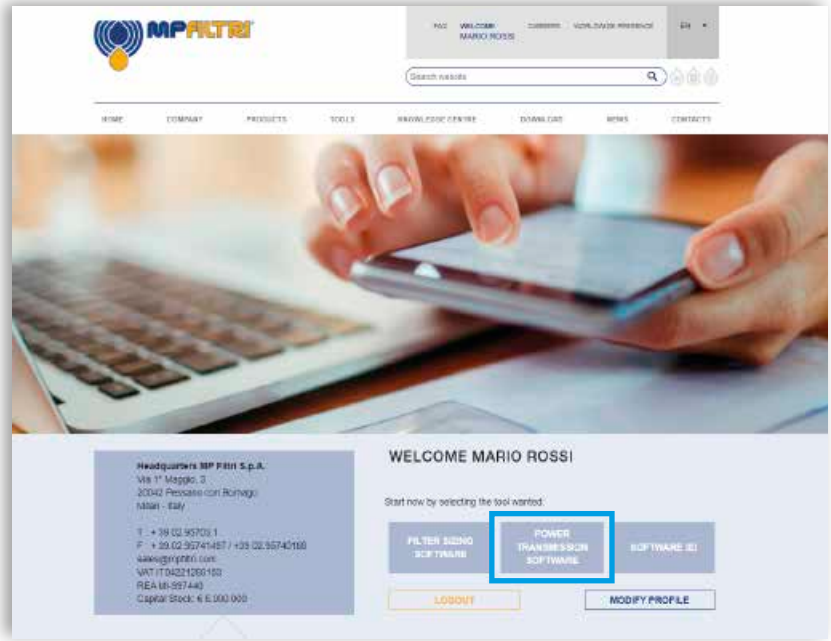

Step (2) Choose Manufacturer: select “Pump type” and “Pump code”

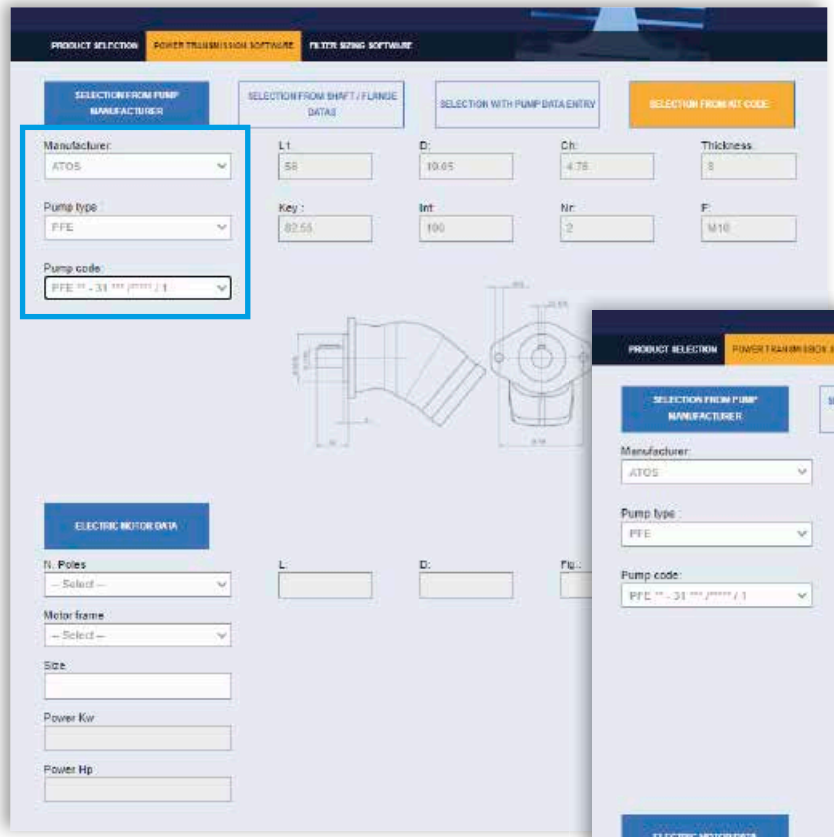

Step (3) Choose N Poles of “Electric motors”: select “Motor frame” and “Size”

Step 4 Choose the insert and eventual Bell-Housings option and accessories for assembly: click on “CALCULATE”

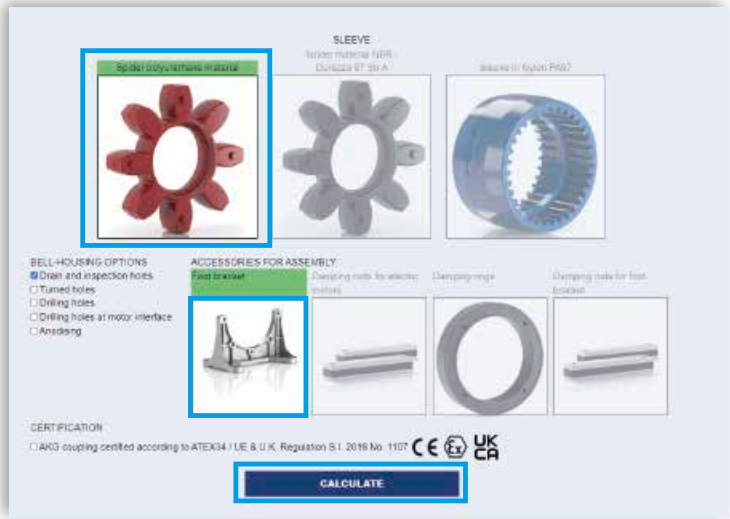

Step 5 Select the option requested and download the report.

Step 6 Download PDF

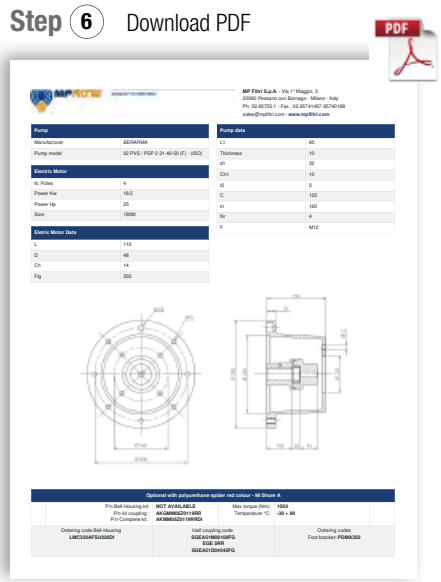

You can’t find the pump on the system?

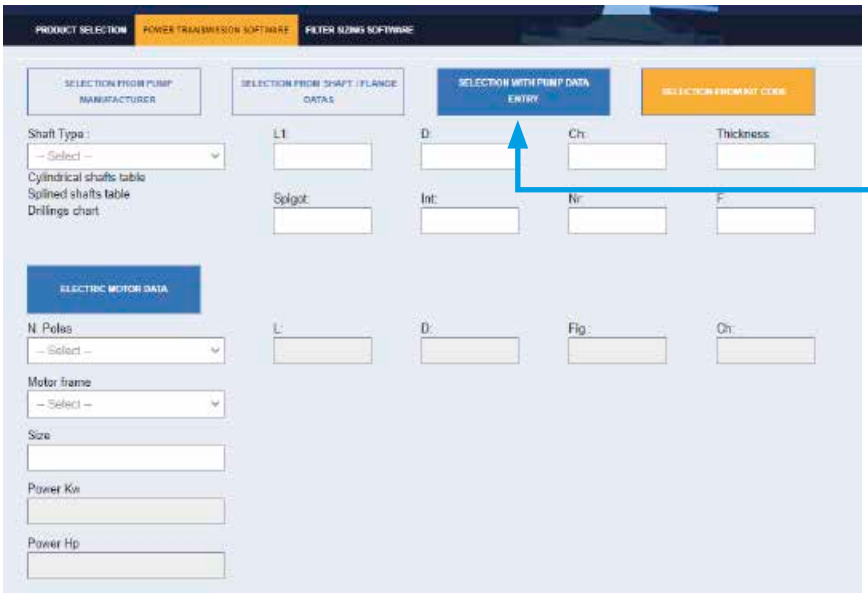

NEW FEATURE!!

Insert pump’s dimension on the section “SELECTION WITH PUMP DATA ENTRY” and follow the instructions to achieve the couplings components code

Drive couplings provide the means by which power is transmitted from the electric motor to the hydraulic pump.

By virtue of their flexible structure, they are able to compensate angular and radial misalignments between motor and pump, and appreciably attenuate the noise generated through the drive line.

The couplings illustrated are available in aluminium and cast iron versions, with a variety of spider options, and will cover a range of applications using electric motors from size 63, rated 0.15 kW, up to size 400 rated 400 kW.

Grub screw on all half-couplings.
Cast iron half-coupling SGEG available with screw mounted.
Steel half-couplings SGES and SGDR available with screw.

Standard ATEX Directive 2014/34/EU and UK Regulation S.I. 2016 No. 1107 (as amended)
Half-couplings are available to use in hazardous area.
The couplings are certified according to Standard ATEX Directive 2014/34/EU and UK Regulation S.I. 2016 No. 1107 (as amended) - Category certified 2G - Area 1 and 2.
Other information available on our web site “www.mpfltri.com”.

The half-couplings SGE* series are in conformity to normative DIN 740/2.**
The max torque to transmit is always less than the max torque that the coupling can transmit.

Couplings

GENERAL INFORMATION	page 16
SGEG - SGEA - SGES - SGEK - EGE	21
AKG	39
SGDR - EGR	47

The half-couplings series SGE*** allow secure transmission between the electric motor and the driven side; they are able to absorb shocks and vibration, in addition to compensating radial misalignment, angular and axial.

The assembly of the couplings can be horizontal/vertical, withstanding vibration and load reversals.

The complete range of couplings are extrapolated from the on-line software, with a length equal than the shaft on which must be mounted and they are completed with grub screw for fixing located on the key.

Available for cylindrical shaft with metric and imperial dimensions as well for splined shafts as per specification DIN, ISO and SAE.

Admissible misalignment radial, angular and axial

Max admissible radial misalignment

Half-coupling	R [mm]
SGE * 01	0.5
SGE * 21	1.0
SGE * 31	1.0
SGE * 40	1.0
SGE * 51	1.5
SGE * 60	1.5
SGE * 80	2.0
SGE * 90	2.0

Max admissible angular misalignment

Half-coupling	ß [°]
SGE * 01	1.5°
SGE * 21	
SGE * 31	
SGE * 40	
SGE * 51	
SGE * 60	
SGE * 80	
SGE * 90	

Max admissible angular alignment

Half-coupling	A [mm]
SGE * 01	2.0
SGE * 21	2.5
SGE * 31	3.0
SGE * 40	3.5
SGE * 51	3.5
SGE * 60	3.5
SGE * 80	4.0
SGE * 90	5.0

Standard ATEX Directive 2014/34/EU and UK Regulation S.I. 2016 No. 1107 (as amended)

Half-couplings are available to use in hazardous area.
The couplings are certified according to Standard ATEX Directive 2014/34/EU and UK Regulation S.I. 2016 No. 1107 (as amended) - Category certified 2G - Area 1 and 2.
Other information available on our web site “www.mpfiltri.com”.

MP Filtri couplings are developed with:

CAD 3D

FEM

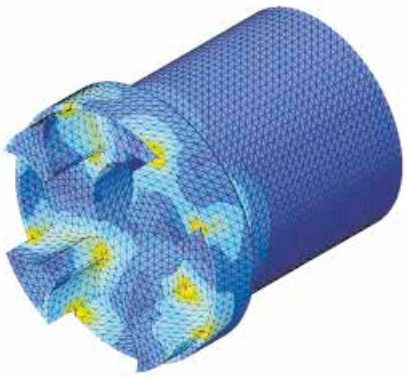

Drawings 3D available on website www.mpfiltri.com at section TOOLS.

Examples verification of the coupling

Torque transmitted by electric motor:

Mt: 9560 x kW / rpm = Nm
Me > Mt x S = Nm
Where:
Mt: Torque transmitted by electric motor
Me: Torque transmitted by coupling
kW: Power of electric motor
Rpm: Revolutions per minute of electric motor
S: Service factor

Table 1

Small pumps, uniform load, low operating pressures e.g. rotary action machine tools - 5/8 work cycles per hour	1.3
Small pumps, uniform load, high working pressures e.g. lifting equipment - 120-150 work cycles per hour	1.5
Pumps, non-uniform load e.g. lifting equipment - 280-300 work cycles per hour	1.7

Example
Electric motor, 4 pole - 4 kW
hydraulic pump, uniform load, low operating pressure
Mt: 9560 x 4 / 1500 = 25.45 Nm
Me > 25.49 x 1.3 = 33 Nm

Half-coupling SGEA21 meets the above requirement.

Select the half-coupling of the calculated size from the motor half-couplings table.
Note: When selecting the coupling, remember that for pumps with splined shaft, only cast iron couplings of the SGEG series can be used.

Determine the size of the coupling according to the type of installation and application envisaged, on the basis of the formulas and the following tables:

Table 2

Half-coupling type		External diameter [mm]	Nominal torque Me - Nm	Maximum transmissible torque Me - Nm	
	ROTAFIT				
SGEA01	**SGEK01**	43	15	20	
SGEA21	**SGEK21**	68	160	190	
SGEA31	**SGEK31**	75	340	380	
SGEA51	**SGEK51**	109.5	550	620	**ALUMINIUM**
SGEG01		40	20	30	
SGEG30		80	400	450	
SGEG40	**SGEK40**	95	550	620	
SGEG60	**SGEK60**	120	760	850	
SGEG80	**SGEK80**	160	2200	2500	
SGEG90		200	5500	6100	**CAST IRON**
SGES40		95	550	620	
SGES60		120	760	850	
SGES80		180	2200	2500	**STEEL**

Nominal and maximum torque values are referred to couplings assembled with standard flexible spiders of the **EGE**** series (see page 31).
Where higher torques are to be transmitted, use flexible spiders of the **EGE**RR** series (see page 31).

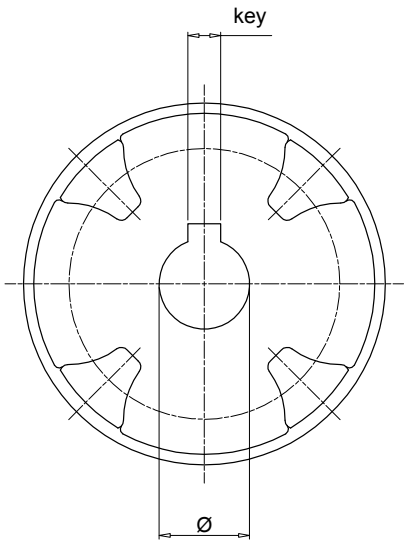

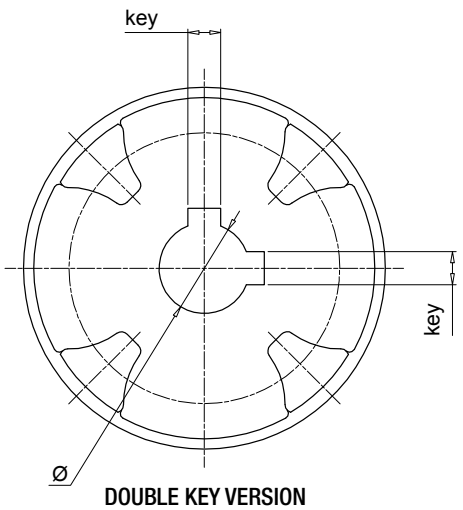

DOUBLE KEY VERSION

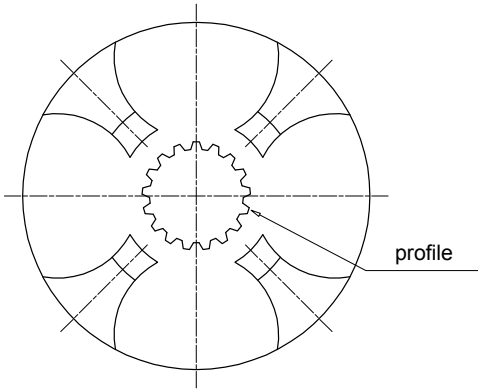

Parallel shaft - Metric Dimensions

Ø [mm]	key [mm]	Code
12	4	**C00**
15	5	**C01**
16	4	**C02**
16	5	**C03**
17	5	**C04**
18	6	**C05**
20	5	**C06**
19	5	**C07**
30	10	**C08**
20	6	**C09**
16	5	**C10**
15	4	**C11**
22	6	**D00**
24	6	**D01**
25	8	**D02**
30	8	**D03**
32	10	**D04**
35	10	**D05**
40	12	**D06**
45	14	**D07**
50	14	**D08**
70	20	**D09**
22	8	**D10**
52	16	**D20**
8	3	**E00**
10	3	**E01**
22	5	**E02**
32	8	**E03**
35	8	**E04**
82	22	**E05**
25	7	**E06**
63	18	**E07**
9	3	**M00**
11	4	**M01**
14	5	**M02**
19	6	**M03**
24	8	**M04**
28	8	**M05**
38	10	**M06**
42	12	**M07**
48	14	**M08**
55	16	**M09**
60	18	**M10**
65	18	**M11**
75	20	**M12**
80	22	**M13**
90	25	**M14**
95	25	**M15**
100	28	**M16**
110	28	**M17**
85	22	**M18**

Parallel shaft - Imperial Dimensions

Ø		key		Code
[inch]	[mm]	[inch]	[mm]	
7/16”	11.11	1/8”	3.18	**G00**
3/4”	19.05	3/16”	4.76	**G01**
7/8”	22.22	3/16”	4.76	**G02**
7/8”	22.22	1/4”	6.35	**G03**
1”	25.4	3/16”	4.76	**G04**
1”	25.40	1/4”	6.35	**G05**
1 1/4”	31.75	1/4”	6.35	**G06**
1 1/4”	31.75	5/16”	7.94	**G07**
1 3/8”	34.94	5/16”	7.94	**G08**
1 1/2”	38.1	3/8”	9.52	**G09**
1 5/8”	41.27	3/8”	9.52	**H00**
1 3/4”	44.45	7/16”	11.11	**H01**
2”	50.8	1/2”	12.7	**H02**
2 11/32”	53.94	1/2”	12.7	**H03**
3/4”	19.02	1/8”	3.17	**H04**
1”	25.4	3/16”	4.76	**H05**
5/8”	15.87	3/16”	4.76	**H06**
17/32”	13.45	1/8”	3.18	**H07**
11/16”	17.46	3/16”	4.76	**H08**
1/2”	12.7	1/8”	3.18	**H09**
5/8”	15.87	5/32”	3.97	**L00**
7/8”	22.22	5/32”	4	**L01**
11/8”	28.58	1/4”	6.35	**L02**
3/4”	19.05	1/4”	6.35	**L03**
1 7/8”	47.63	1/2”	12.7	**L04**
3 3/8”	85.73	7/8”	22.23	**L05**
2 3/8”	60.33	5/8”	15.88	**L06**
2 3/8”	60.33	1/2”	12.7	**L07**
2 7/8”	73.03	3/4”	19.05	**L08**
3 5/8”	92.07	7/8”	22.22	**L09**
1 5/8”	41.6	15/32”	12	**L10**
1 1/8”	28.58	5/16”	7.94	**L15**

Parallel shaft - Double Key

Ø [mm]	key [mm]	Code
16.00	4.00 5.00	**C02***2H**
20.00	5.00 6.00	**C06***2M**
19.00	5.00 6.00	**C07***2L**
24.00	6.00 8.00	**D01***2N**
30.00	8.00 10.00	**D03***2P**
22.22	4.76 6.35	**G02***2E**
25.40	6.35 4.76	**G04***2F**
31.75	6.35 7.94	**G06***2G**

*** = coupling length

SAE Bore - ANS.B.92.1-1970

Profile	Nr. of Th	Code
17 th 8/16	17	**PD01**
14 th 12/24	14	**PD02**
16 th 12/24	16	**PD03**
17 th 12/24	17	**PD04**
9 th 16/32	9	**PD05**
11 th 16/32	11	**PD06**
12 th 16/32	12	**PD07**
13 th 16/32	13	**PD08**
15 th 16/32	15	**PD09**
21 th 16/32	21	**PD10**
23 th 16/32	23	**PD11**
27 th 16/32	27	**PD12**
40 th 16/32	40	**PD13**
20 th 24/48	20	**PD14**
21 th 24/48	21	**PD15**
23 th 24/48	23	**PD16**
25 th 24/48	25	**PD17**
26 th 24/48	26	**PD18**
27 th 12/48	27	**PD19**
28 th 24/48	28	**PD20**
29 th 24/48	29	**PD21**
32 th 24/48	32	**PD22**
21 th 32/64	21	**PD23**
30 th 32/64	30	**PD24**
33 th 32/64	33	**PD25**
23 th 40/80	23	**PD26**
36 th 48/96	36	**PD27**
41 th 48/96	41	**PD28**
47 th 48/96	47	**PD29**
13 th 8/16	13	**PD30**
15 th 8/16	15	**PD31**
14 th 16/32	14	**PD32**
40 th 16/32	40	**PD33**
33 th 16/32	33	**PD34**
9 th 20/40	9	**PD35**
10 th 16/32	10	**PD36**
25 th 20/40	25	**PD37**

Splined bore as per standard DIN5480

Profile	Nr. of Th	Code
W18 x 1.25 x 13	13	**PA01**
W20 x 1.25 x 14	14	**PA02**
W25 x 1.25 x 18	18	**PA03**
W28 x 1.25 x 21	21	**PA04**
W32 x 1.25 x 24	24	**PA05**
W38 x 1.25 x 29	29	**PA06**
W30 x 2 x 14	14	**PA07**
W32 x 2 x 14	14	**PA08**
W35 x 2 x 16	16	**PA09**
W37 x 2 x 17	17	**PA10**
W38 x 2 x 18	18	**PA11**
W40 x 2 x 18	18	**PA12**
W42 x 2 x 20	20	**PA13**
W45 x 2 x 21	21	**PA14**
W50 x 2 x 24	24	**PA15**
W55 x 2 x 26	26	**PA16**
W60 x 2 x 28	28	**PA17**
W70 x 2 x 34	34	**PA18**
W80 x 2 x 38	38	**PA19**
W60 x 3 x 18	18	**PA20**
W70 x 3 x 22	22	**PA21**
W75 x 3 x 24	24	**PA22**
W90 x 3 x 28	28	**PA23**
W105 x 3 x 34	34	**PA24**
W80 x 3 x 25	25	**PA25**
W50 x 1.25 x 38	38	**PA26**
W62 x 1.25 x 48	48	**PA27**
W40 x 1.5 x 25	25	**PA28**
W32 x 1.5 x 20	20	**PA29**
W40 x 1.25 x 30	30	**PA30**

Splined bore as per standard DIN5481

Profile	Nr. of Th	Code
8 x 10	28	**PC01**
10 x 12	30	**PC02**
12 x 14	31	**PC03**
15 x 17	32	**PC04**
17 x 20	33	**PC05**
21 x 24	34	**PC06**
26 x 30	35	**PC07**
30 x 34	36	**PC08**
60 x 65	41	**PC09**

Splined bore as per standard DIN5482

Profile	Nr. of Th	Code
A15 x 12	8	**PB01**
A17 x 14	9	**PB02**
A18 x 15	10	**PB03**
A20 x 17	12	**PB04**
A22 x 19	13	**PB05**
A25 x 22	14	**PB06**
A28 x 25	15	**PB07**
A30 x 27	16	**PB08**
A32 x 28	17	**PB09**
A35 x 31	18	**PB10**
A38 x 34	19	**PB11**
A40 x 36	20	**PB12**
A42 x 38	21	**PB13**
A45 x 41	22	**PB14**
A48 x 44	23	**PB15**
A50 x 45	24	**PB16**
A52 x 47	25	**PB17**
A55 x 50	26	**PB18**
A58 x 53	27	**PB19**
A60 x 55	28	**PB20**
A62 x 57	29	**PB21**
A65 x 60	30	**PB22**
A68 x 62	31	**PB23**
A70 x 64	32	**PB24**
A72 x 66	33	**PB25**
A75 x 69	34	**PB26**
A78 x 72	35	**PB27**
A80 x 74	36	**PB28**
A82 x 76	37	**PB29**
A85 x 79	38	**PB30**
A88 x 82	39	**PB31**
A90 x 84	40	**PB32**
A92 x 86	41	**PB33**
A95 x 89	42	**PB34**
A98 x 92	43	**PB35**
A100 x 94	44	**PB36**

SGEG - SGEA - SGES - SGEK - EGE series

Flexible half-coupling in aluminium, cast iron and steel

Technical data

Giunti - Flexible half-coupling in aluminium, cast iron and steel

Half-couplings materials
SGEA: Pressure die cast aluminium
SGEG: Cast Iron en-GJL-250 (gg25)
SGES: Steel C40
SGEK: Pressure die cast aluminium
SGEK: Cast Iron en-GJL-250 (gg25)
ROTAFIT

Spider materials
EGE** series: Oil-resistant NBR 85 Shore A - black colour
EGE**RR series: in polyurethane Laripur - 92 Shore A - LPR202-95A - red colour

Compatibility with fluids
- Mineral oils types HH-HL-HM-HR-HV, to ISO 6743/4 standard
- Water based emulsions types HFAE-HFAS, to ISO 6743/4 standard
- Water glycol type HFC, to ISO 6743/4 standard: ask for anodized version

Special Applications
Any applications not covered by the normal indications contained in this catalogue must be evaluated and approved by MP Filtri Technical and Sales Department

Temperature
Spider oil-resistant rubber: from -20 °C to +90 °C
Spider polyurethane resin: from -30 °C to +120 °C

Note
For temperatures outside this range, contact MP Filtri Technical and Sales Department

Range

IEC Electric Motors size	Aluminiun	G25 UNI 5007 Cast Iron - C40 Carbon Steel				
	Shaft ISO 3019-2	Shaft ISO 3019-2	Shaft ANSI B92. 1A 1976	Shaft DIN 5480	Shaft DIN 5481	Shaft DIN 5482
IEC 80 Ø200 - Ø19x40	●	●	●	●	●	●
IEC 90 Ø200 - Ø24x50	●	●	●	●	●	●
IEC 100 Ø250 - Ø28x60	●	●	●	●	●	●
IEC 112 Ø250 - Ø28x60	●	●	●	●	●	●
IEC 132 Ø300 - Ø38x80	●	●	●	●	●	●
IEC 160 Ø350 - Ø42x110	●	●	●	●	●	●
IEC 180 Ø350 - Ø48x110	●	●	●	●	●	●
IEC 200 Ø400 - Ø55x110	●	●	●	●	●	●
IEC 225 Ø450 - Ø60x140		●	●	●	●	●
IEC 250 Ø550 - Ø65x140		●	●	●	●	●
IEC 280 Ø550 - Ø75x140		●	●	●	●	●
IEC 315 Ø660 - Ø80x170		●	●	●	●	●
IEC 355 Ø800 - Ø90x170		●	●	●	●	●

IEC Electric Motors size	European standard size						German standard size		
	0.5	1	2	3	3.5	4	ZB	ZF	ZG
IEC 63 Ø140 - Ø11x23	●	●	●				●		
IEC 71 Ø160 - Ø14x30	●	●	●				●		
IEC 80 Ø200 - Ø19x40	●	●	●	●			●	●	
IEC 90 Ø200 - Ø24x50	●	●	●	●			●	●	
IEC 110 Ø250 - Ø28x60		●	●	●	●		●	●	
IEC 112 Ø250 - Ø28x60		●	●	●	●		●	●	
IEC 132 Ø300 - Ø38x80		●	●	●	●	●		●	●
IEC 160 Ø350 - Ø42x110			●	●	●	●		●	●
IEC 180 Ø350 - Ø48x110			●	●	●	●		●	●
IEC 200 Ø400 - Ø55x110			●	●	●	●		●	●
IEC 225 Ø450 - Ø60x140				●	●	●			●

Couplings for standard IEC motors, protection class IP 54 / IP 55

A. C. motor 50 Hz			Motor output n= 3000 RPM 2 poles		Coupling size	Motor output n= 1500 RPM 4 poles		Coupling size	Motor output n= 1000 RPM 6 poles		Coupling size	Motor output n= 750 RPM 8 poles		Coupling size
Size	Shaft end Ø x L [mm] 2-pole	Shaft end Ø x L [mm] 4, 6, 8 pole	Output P [kW]	Torque T [Nm]		Output P [kW]	Torque T [Nm]		Output P [kW]	Torque T [Nm]		Output P [kW]	Torque T [Nm]	
56	9 x 20		0.09	0.32		0.06	0.43		0.037	0.43				
			0.12	0.41		0.09	0.64		0.045	0.52				
63	11 x 23		0.18	0.62	01	0.12	0.88	01	0.06	0.7	01			01
			0.25	0.86		0.18	1.3		0.09	1.1				
71	14 x 30		0.37	1.3		0.25	1.8		0.18	2		0.09	1.4	
			0.55	1.9		0.37	2.5		0.25	2.8		0.12	1.8	
80	19 x 40		0.75	2.5		0.55	3.7		0.37	3.9		0.18	2.5	
			1.1	3.7		0.75	5.1		0.55	5.8		0.25	3.5	
90S	24 x 50		1.5	5	21	1.1	7.5	21	0.75	8	21	0.37	5.3	21
90L			2.2	7.4		1.5	10		1.1	12		0.55	7.9	
100L	28 x 60		3	9.8		2.2	15		1.5	15		0.75	11	
						3	20					1.1	16	
112M			4	13		4	27		2.2	22		1.5	21	
132S	38 x 80		5.5	18		5.5	36		3	30		2.2	30	
			7.5	25	31			31			31			31
132M						7.5	49		4	40		3	40	
									5.5	55				
160M	42 x 110		11	36		11	72		7.5	75		4	54	
			15	49								5.5	74	
160L			18.5	60	40/51	15	98	40/51	11	109	40/51	7.5	100	40/51
180M	48 x 110		22	71		18.5	121							
180L						22	144		15	148		11	145	
200L	55 x 110		30	97		30	196		18.5	181		15	198	
			37	120					22	215				
200S	55 x 110	60 x 140			60	37	240	60			60	18.5	244	60
225M			45	145		45	292		30	293		22	290	
250M	60 x 140	65 x 140	55	177		55	356		37	361		30	392	
280S		75 x 140	75	241		75	484		45	438		37	483	
280M			90	289		90	581		55	535		45	587	
315S			110	353		110	707		75	727		55	712	
315M	65 x 140	80 x 170	132	423	80	132	849	80	90	873	80	75	971	80
			160	513		160	1030		110	1070		90	1170	
315L			200	641		200	1290		132	1280		110	1420	
									160	1550		132	1710	
315		85 x 170	250	802		250	1600		200	1930		160	2070	
			315	1010		315	2020		250	2410		200	2580	
			355	1140		355	2280							
355	75 x 140	95 x 170	400	1280		400	2570		315	3040		250	3220	
			500	1600		500	3210		400	3850		315	4060	
			560	1790	90	560	3580	90	450	4330	90	355	4570	90
400	80 x 170	110 x 210	630	2020		630	4030		500	4810		400	5150	
			710	2270		710	4540		560	5390		450	5790	
			800	2560		800	5120		630	6060		500	6420	

SGEG-SGEA-SGES-SGEK

Designation & Ordering code

PUMP HALF-COUPLING FOR PARALLEL SHAFT

Configuration example: SGE | A | 21 | G02 | 050 | 2E | FG

Pump half-coupling

SGE

Series and material

A	Aluminium
G	Cast Iron
S	Steel
K	Aluminium / Cast Iron - Reduced length

ROTAFIT

Size	SGEG	SGEA	SGES	SGEK
	01	01	01	01
	30	21	30	21
	40	31	40	31
	60	51	60	51
	80		80	40
	90		90	60
				80

Pump shaft code

G02 See page 18

Length

050 See pages 26 ÷ 30

Double key way (available combinations only)

2E See page 18 (parallel shaft - double key)

Groub screw (necessary for SGEA series only)

FG

PUMP HALF-COUPLING FOR SPLINED SHAFT

Configuration example: SGE | G | 40 | PD02 | 050

Pump half-coupling

SGE

Series and material

G	Cast Iron
S	Steel
K	Cast Iron - Reduced length

ROTAFIT

Size	SGEG	SGES	SGEK
	01	01	01
	30	30	21
	40	40	31
	60	60	51
	80	80	40
	90	90	60
			80

Pump shaft code

PD02 See pages 19

Length

050 See pages 28 ÷ 30

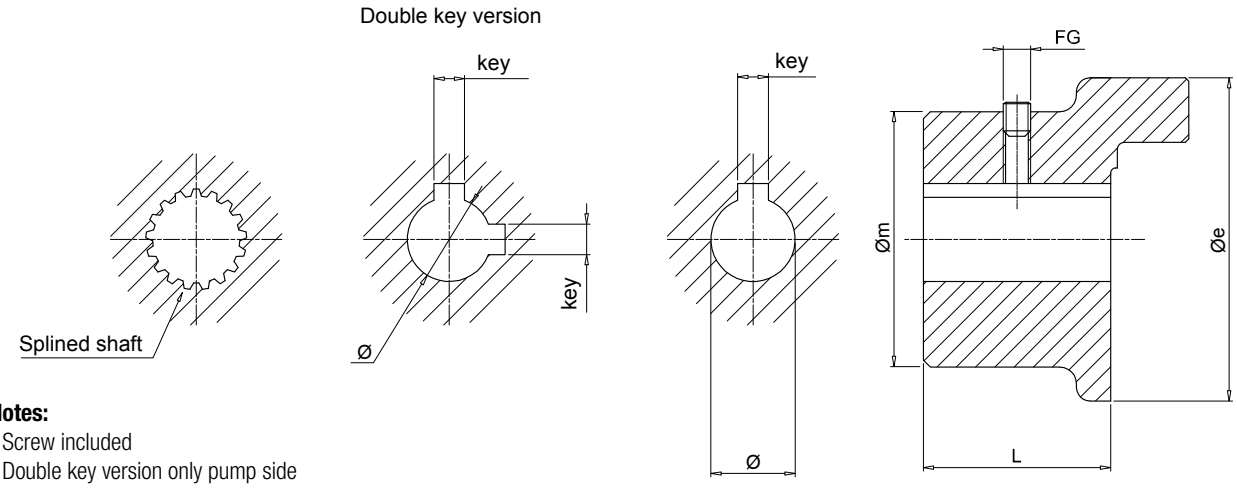

Notes:
- Screw included
- Double key version only pump side

Motor half-coupling

IEC - Electric motors Motor size	Shaft end [Ø x L]	Half-coupling code	Dimensions [mm] Øe	Øm	L	Ø	key	FG	Weight [kg]
63	11x23	**SGEG01M01021**	40	50	21	11	4	M6	0.32
71	14x30	**SGEG01M02028**	40	50	28	14	5	M6	0.42
80	19x40	**SGEG01M03040**	40	50	40	19	6	M6	0.61
90	24x50	**SGEG01M04050**	40	50	50	24	8	M6	0.77
100 - 112	28x60	**SGEG30M05060**	80	-	60	28	8	M8	2.35
		SGEG40M05060	95	-	60	28	8	M8	2.65
132	38x80	**SGEG30M06080**	80	-	80	38	10	M8	3.15
		SGEG40M06080	95	-	80	38	10	M8	3.55
160	42x110	**SGEG40M07110**	95	-	110	42	12	M8	4.70
180	48x110	**SGEG40M08110**	95	-	110	48	14	M8	4.55
200	55x110	**SGEG40M09110**	95	-	110	55	16	M8	4.35
		SGEG60M09110	120	-	110	55	16	M8	9.00
225	60x140	**SGEG60M10140**	120	-	140	60	18	M8	12.30
250	65x140	**SGEG60M11140**	120	-	140	65	18	M8	12.00
		SGEG80M11140	160	-	140	65	18	M8	18.30
280	75x140	**SGEG80M12140**	160	-	140	75	20	M10	17.70
		SGEG90M12100	200	-	100	75	20	M10	21.00
315	80x170	**SGEG80M13170**	160	-	170	80	22	M10	20.60
		SGEG90M13100	200	-	100	80	22	M10	20.00
355	95x140	**SGEG90M15100**	200	-	100	95	25	M10	19.00
400	100x210	**SGEG90M16100**	200	-	100	100	28	M10	18.00

Pump half-couplings

Half-coupling code	Dimensions [mm] Ø min	Ø max	Øe	L min	L max	Standard lengths [mm]
SGEG01 * *****	-	24	40	20	50	every 5 mm
SGEG30 * *****	-	42	80	30	80	
SGEG40 * *****	-	55	95	30	110	
SGEG60 * *****	-	75	120	40	140	
SGEG80 * *****	-	85	160	50	170	
SGEG90 * *****	-	100	200	40	100	

Complete the half-coupling code with the shaft's code and length
Example: **SGEG40PD02040**

PD02 - see page 19
040 - table "pump half-coupling - standard lengths"

All SGEG series half-couplings are supplied with a grub screw hole as standard, and with a grub screw **UNI 5929 DIN 916** fitted to the hub.
Note: For lengths other than those indicated in "Pump half-coupling" table, contact MP Filtri Technical and Sales Department.

SGEA Aluminium

Dimensions

Double key version

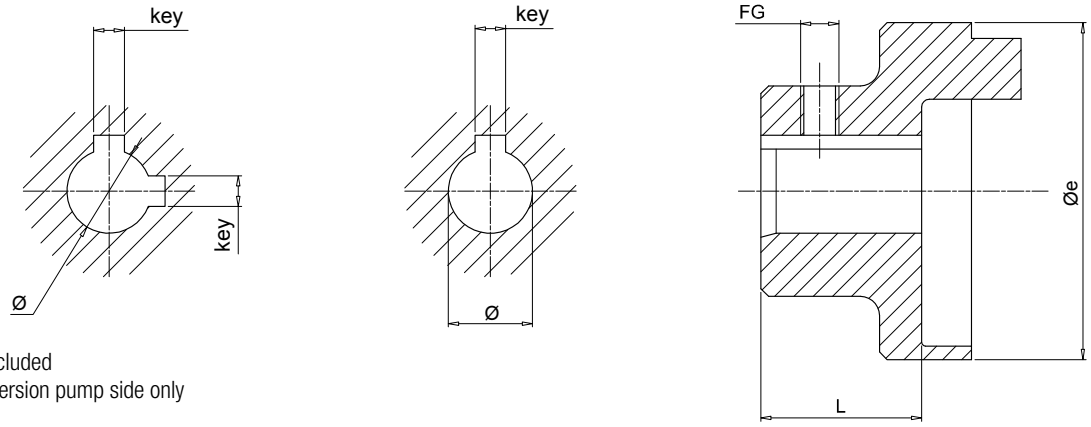

Notes:
- Screw not included
- Double key version pump side only

Motor half-coupling

IEC - Electric motors Motor size	Shaft end [Ø x L]	Half-coupling code	Dimensions [mm] Øe	L	Ø	key	FG	Weight [kg]
63	11x23	**SGEA01M01019FG**	44.0	21	11	4	M5	0.07
71	14x30	**SGEA01M02028FG**	44.0	28	14	5	M5	0.08
80	19x40	**SGEA01M03040FG**	44.0	40	19	6	M5	0.12
		SGEA21M03040FG	70.0	40	19	6	M6	0.30
90	24x50	**SGEA01M04048FG**	44.0	48	24	8	M5	0.13
		SGEA21M04048FG	70.0	48	24	8	M6	0.28
100 - 112	28x60	**SGEA21M05060FG**	70.0	60	28	8	M6	0.33
		SGEA31M05060FG	85.0	60	28	8	M8	0.48
132	38x80	**SGEA21M06080FG**	70.0	80	38	10	M6	0.44
		SGEA31M06077FG	85.0	77	38	10	M8	0.78
		SGEA51M06077FG	109.5	77	38	10	M8	1.60
160	42x110	**SGEA51M07109FG**	109.5	109	42	12	M8	1.60
180	48x110	**SGEA51M08109FG**	109.5	109	48	14	M8	1.60
200	55x110	**SGEA51M09109FG**	109.5	109	55	16	M8	1.90

Pump half-couplings

Half-coupling code	Dimensions [mm] Ø min	Ø max	Øe	L min	L max	Standard lengths [mm]										FG
SGEA01 * *****	11	19	44.0	17	50	17	23	30	40	44	48	-	-	-	-	M5
SGEA21 * *****	15	24	70.0	23	50	35	40	42	44	48	50	-	-	-	-	M6
SGEA21 * *****	25	28	70.0	40	60	40	42	44	48	50	55	58	60	-	-	M6
SGEA31 * *****	18	32	85.0	40	60	42	45	48	50	52	55	58	60	-	-	M8
SGEA31 * *****	38	42	85.0	60	80	60	65	70	77	80	-	-	-	-	-	M8
SGEA51 * *****	18	40	109.5	40	70	42	45	48	50	52	55	58	60	65	70	M8
SGEA51 * *****	38	55	109.5	70	109	70	75	80	85	90	95	100	105	109	-	M8

Complete the half-coupling code with the shaft's code and length
Example: **SGEA51D02040FG**

D02 - see page 18
040 - table "pump half-coupling - standard lengths"

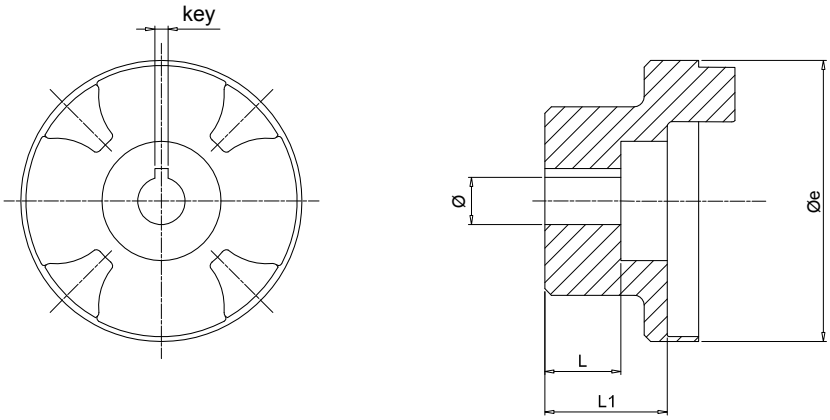

Half-coupling for gear pumps - parallel

Half-coupling code	Dimensions [mm]					Weight [kg]
	Øe	L	L1	Ø	key	
SGEA01FS05M	44	10.0	17.0	6	2	0.07
SGEA01FS05C	44	10.0	17.0	7	2	0.08
SGEA01FS1C0	44	-	17.0	12	3	0.13
SGEA21FS1C0	70	14.5	21.5	12	3	0.48
SGEA31FS1C0	85	14.5	37.0	12	3	1.90

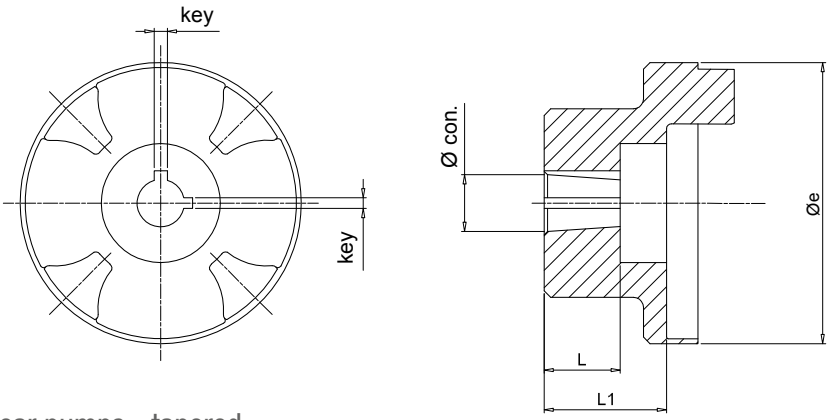

Half-coupling for gear pumps - tapered

Half-coupling code	Dimensions [mm]					Weight [kg]	Conical
	Øe	L	L1	Ø	key		
SGEA01FS100	44.0	14.5	16.0	9.7	2.4	0.12	1:8
SGEA01FS1M0	44.0	16.0	16.0	13.9	3	0.30	1:8
SGEA01FSZBR	44.0	11.5	14.5	9.8	2	0.28	1:5
SGEA21FS100	70.0	14.5	21.5	9.7	2.4	0.33	1:8
SGEA21FS1M0	70.0	18.5	21.5	13.9	3	0.78	1:8
SGEA21FS200	70.0	21.5	21.5	17.2	3.2 - 4	1.60	1:8
SGEA21FSZFR	70.0	20.0	21.5	16.9	3	1.60	1:5
SGEA21FS300	70.0	27.0	41.0	21.6	4	1.60	1:8
SGEA31FS100	85.0	14.5	37.0	9.7	2.4	1.90	1:8
SGEA31FS1M0	85.0	17.5	36.0	13.9	3	0.33	1:8
SGEA31FS200	85.0	23.0	37.0	17.2	3.2 - 4	0.48	1:8
SGEA31FS300	85.0	27.0	37.0	21.6	4	0.78	1:8
SGEA31FS350	85.0	35.0	37.0	25.6	4.76 - 5	1.60	1:8
SGEA31FSZFR	85.0	17.0	37.0	16.9	3	1.60	1:5
SGEA31FSZGR	85.0	27.0	34.0	25.2	5	1.60	1:5
SGEA51FS200	109.5	23.5	32.0	17.2	3.2 - 4	1.90	1:8
SGEA51FS300	109.5	25.0	32.0	21.6	4	1.90	1:8
SGEA51FS350	109.5	32.0	32.0	25.6	4.76 - 5	1.60	1:8
SGEA51FSZFR	109.5	19.5	32.0	16.9	3	1.90	1:5
SGEA51FSZGR	109.5	25.0	32.0	24.6	5	1.90	1:5

SGES Steel C40

Dimensions

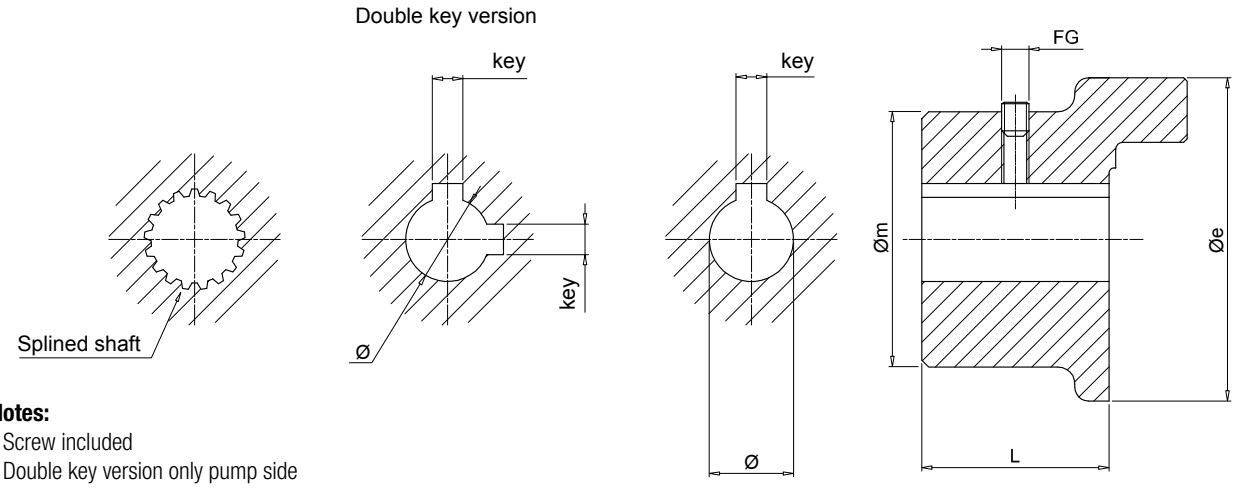

Notes:
- Screw included
- Double key version only pump side

Motor half-coupling

IEC - Electric motors Motor size	Shaft end [Ø x L]	Half-coupling code	Dimensions [mm] Øe	Øm	L	Ø	key	FG	Weight [kg]
63	11x23	**SGES01M01021**	40	50	21	11	4	M6	0.32
71	14x30	**SGES01M02028**	40	50	28	14	5	M6	0.42
80	19x40	**SGES01M03040**	40	50	40	19	6	M6	0.61
90	24x50	**SGES01M04050**	40	50	50	24	8	M6	0.77
100 - 112	28x60	**SGES31M05060**	80	-	60	28	8	M8	2.35
		SGES40M05060	95	-	60	28	8	M8	2.65
132	38x80	**SGES31M06080**	80	-	80	38	10	M8	3.15
		SGES40M06080	95	-	80	38	10	M8	3.55
160	42x110	**SGES40M07110**	95	-	110	42	12	M8	4.70
180	48x110	**SGES40M08110**	95	-	110	48	14	M8	4.55
200	55x110	**SGES40M09110**	95	-	110	55	16	M8	4.35
		SGES60M09110	120	-	110	55	16	M8	9.00
225	60x140	**SGES60M10140**	120	-	140	60	18	M8	12.30
250	65x140	**SGES60M11140**	120	-	140	65	18	M8	12.00
		SGES80M11140	160	-	140	65	18	M8	18.30
280	75x140	**SGES80M12140**	160	-	140	75	20	M10	17.70
		SGES90M12100	200	-	100	75	20	M10	21.00
315	80x170	**SGES80M13170**	160	-	170	80	22	M10	20.60
		SGES90M13100	200	-	100	80	22	M10	20.00
355	95x140	**SGES90M15100**	200	-	100	95	25	M10	19.00
400	100x210	**SGES90M16100**	200	-	100	100	28	M10	18.00

Pump half-couplings

Half-coupling code	Dimensions [mm] Ø min	Ø max	Øe	L min	L max	Standard lengths [mm]
SGES01 * *****	-	24	40	20	50	every 5 mm
SGES30 * *****	-	42	80	30	80	
SGES40 * *****	-	55	95	30	110	
SGES60 * *****	-	75	120	40	140	
SGES80 * *****	-	85	160	50	170	
SGES90 * *****	-	100	200	40	100	

Complete the half-coupling code with the shaft's code and length
Example: **SGES40PD02040**

PD02 - see page 19
040 - table "pump half-coupling - standard lengths"

All SGES series half-couplings are supplied with a grub screw hole as standard, and with a grub screw **UNI 5929 DIN 916** fitted to the hub.
Note: For lengths other than those indicated in "Pump half-coupling" table, contact MP Filtri Technical and Sales Department.

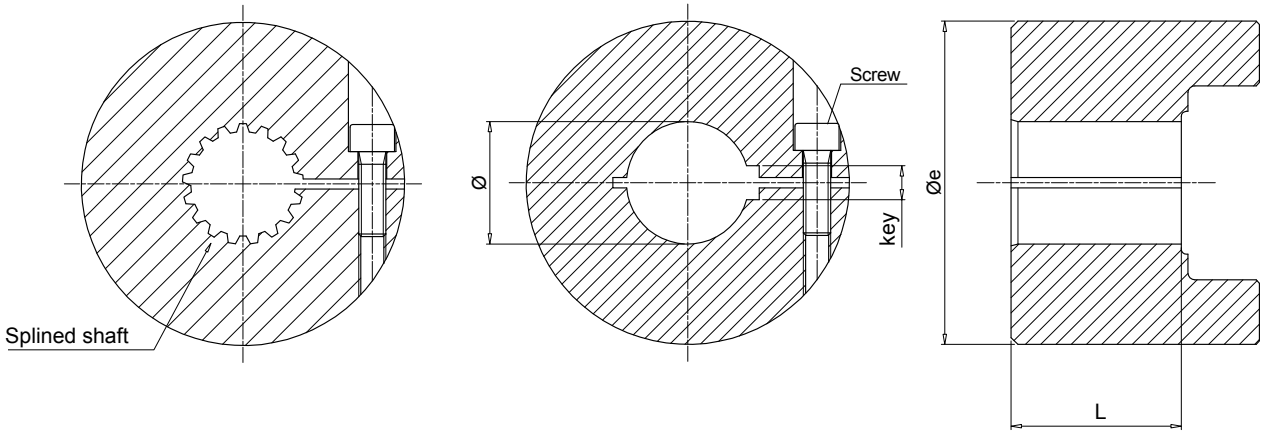

Motor half-coupling

IEC - Electric motors		Half-coupling code	Dimensions [mm]					Weight [kg]
Motor size	Shaft end [Ø x L]		Øe	L	Ø	key	Screw	
132	38x80	**SGES40M06050G0**	95	50	38	10	M8	4.00
160	42x110	**SGES40M07065G0**	95	65	42	12	M8	5.00
180	48x110	**SGES40M08065G0**	95	65	48	14	M8	5.00
200	55x110	**SGES60M09085G0**	120	85	55	16	M10	8.00
225	60x140	**SGES60M10085G0**	120	85	60	18	M10	8.00
250	65x140	**SGES60M11085G0**	120	85	65	18	M10	8.00
280	75x140	**SGES60M12085G0**	120	85	75	20	M10	8.00
315	80x170	**SGES80M13085G0**	160	85	80	22	M10	13.00

Pump half-couplings

Half-coupling code	Dimensions [mm]			
	Ø min	Ø max	Øe	L
SGES40 * *****	-	55	95	35
SGES60 * *****	-	65	120	65
SGES80 * *****	-	75	160	85

Complete the half-coupling designation with the pump interface code and the length.
Example: **SGES40PD02035G0** (see page 19).

Dimensions

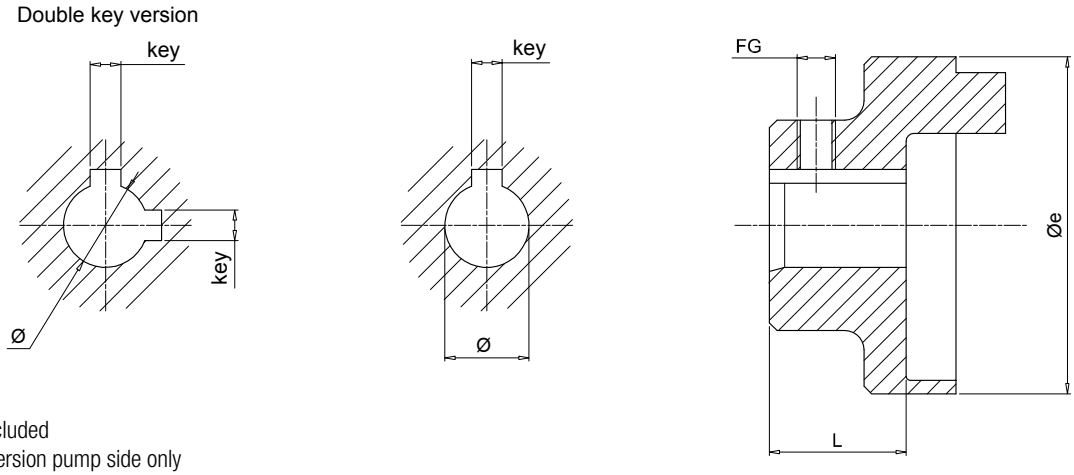

Notes:
- Screw not included
- Double key version pump side only

Motor half-coupling

IEC - Electric motors Motor size	Shaft end [Ø x L]	Half-coupling code	Dimensions [mm] Øe	L	Ø	key	FG	Weight [kg]
63	11x23	**SGEA01M01019FG**	44.0	21	11	4	M5	0.07
71	14x30	**SGEA01M02028FG**	44.0	28	14	5	M5	0.08
80	19x40	**SGEA01M03040FG**	44.0	40	19	6	M5	0.12
		SGEA21M03040FG	70.0	40	19	6	M6	0.30
90	24x50	**SGEA01M04048FG**	44.0	48	24	8	M5	0.13
		SGEA21M04048FG	70.0	48	24	8	M6	0.28
100 - 112	28x60	**SGEA21M05060FG**	70.0	60	28	8	M6	0.33
		SGEA31M05060FG	85.0	60	28	8	M8	0.48
132	38x80	**SGEA21M06080FG**	70.0	80	38	10	M6	0.44
		SGEA31M06077FG	85.0	77	38	10	M8	0.78
		SGEA51M06077FG	109.5	77	38	10	M8	1.60
160	42x110	**SGEA51M07109FG**	109.5	109	42	12	M8	1.60
180	48x110	**SGEA51M08109FG**	109.5	109	48	14	M8	1.60
200	55x110	**SGEA51M09109FG**	109.5	109	55	16	M8	1.90

Pump half-couplings

Half-coupling code	Dimensions [mm] Ø min	Ø max	Øe	L	FG	Weight [kg]
SGEK01 * *****	11	19	44.0	25	M5	0.08
SGEK21 * *****	15	28	70.0	35	M6	0.10
SGEK31 * *****	18	42	85.0	45	M8	0.15
SGEK51 * *****	18	55	109.5	50	M8	0.35

Complete the half-coupling code with the shaft's code and length
Example: **SGEK51D02050FG**

D02 - see page 18
050 - table "pump half coupling - dimension L"

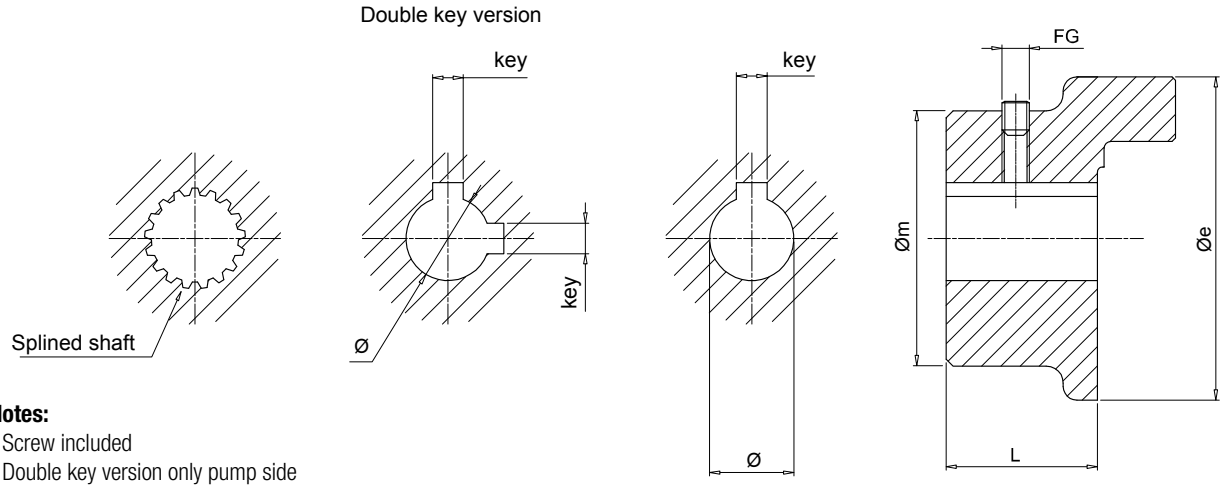

Notes:
- Screw included
- Double key version only pump side

Motor half-coupling

IEC - Electric motors Motor size	Shaft end [Ø x L]	Half-coupling code	Dimensions [mm] Øe	Øm	L	Ø	key	FG	Weight [kg]
63	11x23	**SGEG01M01021**	40	50	21	11	4	M6	0.32
71	14x30	**SGEG01M02028**	40	50	28	14	5	M6	0.42
80	19x40	**SGEG01M03040**	40	50	40	19	6	M6	0.61
90	24x50	**SGEG01M04050**	40	50	50	24	8	M6	0.77
100 - 112	28x60	**SGEG30M05060**	80	-	60	28	8	M8	2.35
		SGEG40M05060	95	-	60	28	8	M8	2.65
132	38x80	**SGEG30M06080**	80	-	80	38	10	M8	3.15
		SGEG40M06080	95	-	80	38	10	M8	3.55
160	42x110	**SGEG40M07110**	95	-	110	42	12	M8	4.70
180	48x110	**SGEG40M08110**	95	-	110	48	14	M8	4.55
200	55x110	**SGEG40M09110**	95	-	110	55	16	M8	4.35
		SGEG60M09110	120	-	110	55	16	M8	9.00
225	60x140	**SGEG60M10140**	120	-	140	60	18	M8	12.30
250	65x140	**SGEG60M11140**	120	-	140	65	18	M8	12.00
		SGEG80M11140	160	-	140	65	18	M8	18.30
280	75x140	**SGEG80M12140**	160	-	140	75	20	M10	17.70
		SGEG90M12100	200	-	100	75	20	M10	21.00
315	80x170	**SGEG80M13170**	160	-	170	80	22	M10	20.60
		SGEG90M13100	200	-	100	80	22	M10	20.00
355	95x140	**SGEG90M15100**	200	-	100	95	25	M10	19.00
400	100x210	**SGEG90M16100**	200	-	100	100	28	M10	18.00

Pump half-couplings

Half-coupling code	Dimensions [mm] Ø min	Ø max	Øe	L	FG	Weight [kg]
SGEK40 * *****	-	55	95	50	M8	3
SGEK60 * *****	-	75	12	65	M8	6
SGEK80 * *****	-	85	160	85	M10	8

Complete the half-coupling code with the shaft's code and length
Example: **SGEK40PD02050**

PD02 - see page 19
050 - table "pump half coupling - dimension L"

All SGEG/SGEK series half-couplings are supplied with a grub screw hole as standard, and with a grub screw **UNI 5929 DIN 916** fitted to the hub.
Note: For lengths other than those indicated in "Pump half-coupling" table, contact MP Filtri Technical and Sales Department.

EGE Spiders

Dimensions

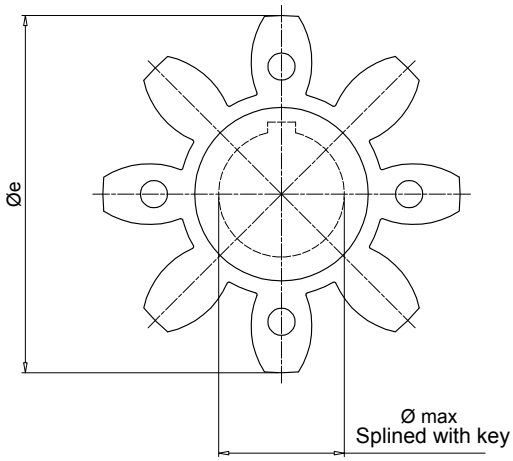

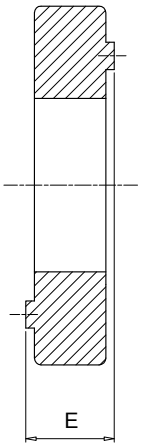

Notes:
Made of black oil-resistant rubber, these components serve to interconnect the two halves (motor - pump) of a flexible coupling.

EGE** series

Code	Half-coupling code		Dimensions [mm] E	Øe	Ø max	Nominal torque Nm	Max torque Nm	Weight [kg]
		ROTAFIT						
EGE0	SGEA01 - SGEG01	SGEK01	15	40	16	10	20	0.006
EGE2	SGEA21	SGEK21	18	65	25	95	190	0.02
EGE3	SGEA31 - SGEG30	SGEK31	22	80	35	190	380	0.04
EGE5	SGEA51	SGEK51	26	105	45	310	620	0.06
EGE4	SGEG40 - SGES40	SGEK40	24	95	40	310	620	0.09
EGE6	SGEG60 - SGES60	SGEK60	28	120	55	430	860	0.13
EGE8	SGEG80 - SGES80	SGEK80	38	160	75	1250	2500	0.36

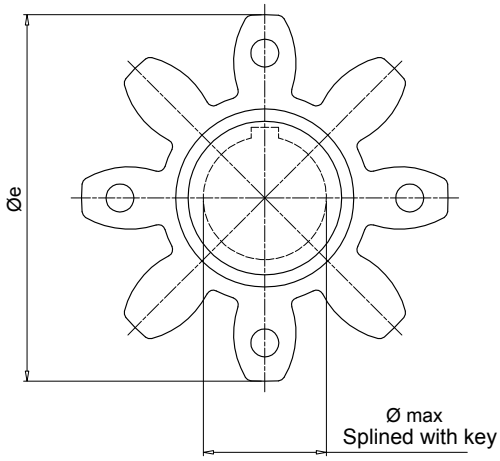

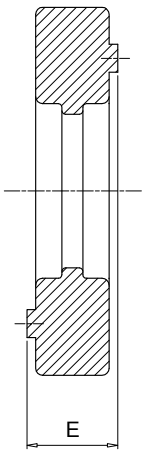

Notes:
Made in polyurethane Laripur - LPR202-95A, red colour, are suitable for applications where high levels of torque are transmitted.

EGE**RR series

Code	Half-coupling code		Dimensions [mm] E	Øe	Ø max	Nominal torque Nm	Max torque Nm	Weight [kg]
		ROTAFIT						
EGE0RR	SGEA01 - SGEG01	SGEK01	15	40	16	15	30	0.006
EGE2RR	SGEA21	SGEK21	18	65	25	115	230	0.02
EGE3RR	SGEA31 - SGEG30	SGEK31	22	80	35	250	500	0.04
EGE5RR	SGEA51	SGEK51	26	105	45	400	800	0.06
EGE4RR	SGEG40 - SGES40	SGEK40	24	95	40	380	760	0.09
EGE6RR	SGEG60 - SGES60	SGEK60	28	120	55	550	1100	0.13
EGE8RR	SGEG80 - SGES80	SGEK80	38	160	75	1400	2900	0.36
EGE9RP	SGEG90	-	48	200	95	8900	9900	0.59

Version for extreme temperatures available on request.
For further information, contact MP Filtri Technical and Sales Department.

Metric cylindrical finish bore H7 Keyway to DIN 6885 sheet 1 (JS9)

Size	Materials	Diameter / Key [mm]																							
		8	9	10	11	12	13	14	15	15	16	16	16	17	18	19	19	20	20	22	22	22	24	24	25	25
		3	3	3	4	4	5	5	5	4	4	5	5	5	6	5	6	5	6	6	8	5	6	8	8	7
01	Aluminium				•	•	•	•	•	•	•	•	•	•	•	•	•	•	•	•	•	•	•	•		
	Steel				•	•	•	•	•	•	•	•	•	•	•	•	•	•	•	•	•	•	•	•		
	Cast Iron				•	•	•	•	•	•	•	•	•	•	•	•	•	•	•	•	•	•	•	•		
21	Aluminium							•	•	•	•	•	•	•	•	•	•	•	•	•	•	•	•	•	•	•
	Steel							•	•	•	•	•	•	•	•	•	•	•	•	•	•	•	•	•	•	•
	Cast Iron																									
31	Aluminium														•	•	•	•	•	•	•	•	•	•	•	•
	Steel														•	•	•	•	•	•	•	•	•	•	•	•
	Cast Iron														•	•	•	•	•	•	•	•	•	•	•	•
40	Aluminium																									
	Steel				•	•	•	•	•	•	•	•	•	•	•	•	•	•	•	•	•	•	•	•	•	•
	Cast Iron				•	•	•	•	•	•	•	•	•	•	•	•	•	•	•	•	•	•	•	•	•	•
51	Aluminium														•	•	•	•	•	•	•	•	•	•	•	•
	Steel																									
	Cast Iron																									
60	Aluminium																									
	Steel														•	•	•	•	•	•	•	•	•	•	•	•
	Cast Iron														•	•	•	•	•	•	•	•	•	•	•	•
80	Aluminium																									
	Steel														•	•	•	•	•	•	•	•	•	•	•	•
	Cast Iron														•	•	•	•	•	•	•	•	•	•	•	•
90	Aluminium																									
	Steel														•	•	•	•	•	•	•	•	•	•	•	•
	Cast Iron														•	•	•	•	•	•	•	•	•	•	•	•

Size	Materials	Diameter / Key [mm]																								
		28	30	30	32	32	35	35	38	40	42	45	48	50	52	55	60	63	65	70	75	80	82	90	95	100
		8	10	8	10	8	10	8	10	12	12	14	14	14	16	16	18	18	18	20	20	22	22	25	25	28
01	Aluminium																									
	Steel																									
	Cast Iron																									
21	Aluminium	•																								
	Steel	•																								
	Cast Iron																									
31	Aluminium	•	•	•	•	•	•	•	•																	
	Steel	•	•	•	•	•	•	•	•																	
	Cast Iron	•	•	•	•	•	•	•	•																	
40	Aluminium																									
	Steel	•	•	•	•	•	•	•	•	•	•	•	•													
	Cast Iron	•	•	•	•	•	•	•	•	•	•	•	•													
51	Aluminium	•	•	•	•	•	•	•	•	•	•	•	•	•	•	•										
	Steel																									
	Cast Iron																									
60	Aluminium																									
	Steel	•	•	•	•	•	•	•	•	•	•	•	•	•	•	•	•	•	•							
	Cast Iron	•	•	•	•	•	•	•	•	•	•	•	•	•	•	•	•	•	•							
80	Aluminium																									
	Steel	•	•	•	•	•	•	•	•	•	•	•	•	•	•	•	•	•	•	•	•	•	•			
	Cast Iron	•	•	•	•	•	•	•	•	•	•	•	•	•	•	•	•	•	•	•	•	•	•			
90	Aluminium																									
	Steel	•	•	•	•	•	•	•	•	•	•	•	•	•	•	•	•	•	•	•	•	•	•	•	•	•
	Cast Iron	•	•	•	•	•	•	•	•	•	•	•	•	•	•	•	•	•	•	•	•	•	•	•	•	•

Imperial cylindrical finish bore H7 Keyway to DIN 6885 sheet 1 (JS9)

Size	Materials	Diameter / Key [mm]															
		11.11	12.7	13.45	15.87	15.87	17.46	19.02	19.05	19.05	22.22	22.22	22.22	25.4	25.4	26.94	28.58
		3.18	3.18	3.18	4.76	3.97	4.76	3.17	4.76	6.35	4.76	6.35	4	6.35	4.76	4.76	6.35
01	Aluminium				•	•	•	•	•	•	•	•	•	•	•	•	•
	Steel				•	•	•	•	•	•	•	•	•	•	•	•	•
	Cast Iron				•	•	•	•	•	•	•	•	•	•	•	•	•
21	Aluminium							•	•	•	•	•	•	•	•	•	•
	Steel							•	•	•	•	•	•	•	•	•	•
	Cast Iron																
31	Aluminium							•	•	•	•	•	•	•	•	•	•
	Steel							•	•	•	•	•	•	•	•	•	•
	Cast Iron							•	•	•	•	•	•	•	•	•	•
40	Aluminium																
	Steel				•	•	•	•	•	•	•	•	•	•	•	•	•
	Cast Iron				•	•	•	•	•	•	•	•	•	•	•	•	•
51	Aluminium							•	•	•	•	•	•	•	•	•	•
	Steel																
	Cast Iron																
60	Aluminium																
	Steel							•	•	•	•	•	•	•	•	•	•
	Cast Iron							•	•	•	•	•	•	•	•	•	•
80	Aluminium																
	Steel							•	•	•	•	•	•	•	•	•	•
	Cast Iron							•	•	•	•	•	•	•	•	•	•
90	Aluminium																
	Steel													•	•	•	•
	Cast Iron													•	•	•	•

Size	Materials	Diameter / Key [mm]															
		28.58	31.75	31.75	34.94	38.1	41.27	41.6	44.45	47.63	50.8	53.94	60.33	60.33	73.03	85.73	92.07
		7.94	6.35	7.94	7.94	9.52	9.52	12	11.11	12.7	12.7	12.7	15.88	12.7	19.05	22.23	22.22
01	Aluminium	•															
	Steel	•															
	Cast Iron	•															
21	Aluminium	•															
	Steel	•															
	Cast Iron																
31	Aluminium	•	•	•	•	•	•	•	•								
	Steel	•	•	•	•	•	•	•	•								
	Cast Iron	•	•	•	•	•	•	•	•								
40	Aluminium																
	Steel	•	•	•	•	•	•	•	•	•	•	•	•				
	Cast Iron	•	•	•	•	•	•	•	•	•	•	•	•				
51	Aluminium	•	•	•	•	•	•	•	•	•	•	•	•	•	•		
	Steel																
	Cast Iron																
60	Aluminium																
	Steel	•	•	•	•	•	•	•	•	•	•	•	•	•	•	•	•
	Cast Iron	•	•	•	•	•	•	•	•	•	•	•	•	•	•	•	•
80	Aluminium																
	Steel	•	•	•	•	•	•	•	•	•	•	•	•	•	•	•	•
	Cast Iron	•	•	•	•	•	•	•	•	•	•	•	•	•	•	•	•
90	Aluminium																
	Steel	•	•	•	•	•	•	•	•	•	•	•	•	•	•	•	•
	Cast Iron	•	•	•	•	•	•	•	•	•	•	•	•	•	•	•	•

SAE involute spline (angle 30°) - ANS.B.92.1.1970

Size	Materials	Nr. of th - Diametral pitch															
		9	10	11	12	13	14	15	21	23	27	33	40	14	16	17	13
		16/32	16/32	16/32	16/32	16/32	16/32	16/32	16/32	16/32	16/32	16/32	16/33	12/24	12/24	12/24	8/16
01	Steel	•	•	•	•	•	•	•						•			
	Cast Iron	•	•	•	•	•	•	•						•			
21	Steel	•	•	•	•	•	•	•						•			
	Cast Iron	•	•	•	•	•	•	•						•			
31	Steel	•	•	•	•	•	•	•	•	•	•			•	•	•	•
	Cast Iron	•	•	•	•	•	•	•	•	•	•			•	•	•	•
40	Steel			•	•	•	•	•	•	•	•	•		•	•	•	•
	Cast Iron			•	•	•	•	•	•	•	•	•		•	•	•	•
60	Steel					•	•	•	•	•	•	•	•		•	•	•
	Cast Iron					•	•	•	•	•	•	•	•		•	•	•
80	Steel								•	•	•	•	•		•	•	•
	Cast Iron								•	•	•	•	•		•	•	•
90	Steel								•	•	•	•	•		•	•	•
	Cast Iron								•	•	•	•	•		•	•	•

Size	Materials	Nr. of th - Diametral pitch														
		15	17	20	21	23	25	26	28	29	32	23	36	41	47	33
		8/16	8/16	24/48	24/48	24/48	24/48	24/48	24/48	24/48	24/48	40/80	48/96	48/96	48/96	32/64
01	Steel			•	•	•			•	•		•	•	•	•	
	Cast Iron			•	•	•			•	•		•	•	•	•	
21	Steel			•	•	•	•	•	•	•		•	•	•	•	
	Cast Iron			•	•	•	•	•	•	•		•	•	•	•	
31	Steel	•		•	•	•	•	•	•	•	•	•	•	•	•	
	Cast Iron	•		•	•	•	•	•	•	•	•	•	•	•	•	•
40	Steel	•	•	•	•	•	•	•	•	•	•	•	•	•	•	•
	Cast Iron	•	•	•	•	•	•	•	•	•	•	•	•	•	•	•
60	Steel	•	•	•	•	•	•	•	•	•	•			•	•	•
	Cast Iron	•	•	•	•	•	•	•	•	•	•			•	•	•
80	Steel	•	•								•					•
	Cast Iron	•	•								•					•
90	Steel	•	•								•					•
	Cast Iron	•	•								•					•

Spline bores to DIN 5480

Size	Materials	Nr. of th - Size										
		13	14	14	14	16	17	18	18	18	20	18
		18x1.25	20x1.25	30x2	32x2	35x2	37x2	25x1.25	38x2	40x2	42x2	60x3
01	Steel	•	•									
	Cast Iron	•	•									
21	Steel	•	•	•	•	•		•				
	Cast Iron	•	•	•	•	•		•				
31	Steel	•	•	•	•	•	•	•				
	Cast Iron	•	•	•	•	•	•	•				
40	Steel	•	•	•	•	•	•	•	•	•	•	
	Cast Iron	•	•	•	•	•	•	•	•	•	•	
60	Steel	•	•	•	•	•	•	•	•	•	•	•
	Cast Iron	•	•	•	•	•	•	•	•	•	•	•
80	Steel				•	•	•		•	•	•	•
	Cast Iron				•	•	•		•	•	•	•
90	Steel								•	•	•	•
	Cast Iron								•	•	•	•

Size	Materials	Nr. of th - Size									
		21	21	22	24	24	26	28	29	34	38
		28x1.25	45x2	70x3	32x1.25	50x2	55x2	60x2	38x1.25	70x2	80x2
01	Steel										
	Cast Iron										
21	Steel	•									
	Cast Iron	•									
31	Steel	•			•				•		
	Cast Iron	•			•				•		
40	Steel	•	•		•				•		
	Cast Iron	•	•		•				•		
60	Steel	•	•		•	•	•	•	•		
	Cast Iron	•	•		•	•	•	•	•		
80	Steel		•	•	•	•	•	•	•	•	•
	Cast Iron		•	•	•	•	•	•	•	•	•
90	Steel		•	•		•	•	•	•	•	•
	Cast Iron		•	•		•	•	•	•	•	•

Spline bores to DIN 5481

Size	Materials	Nr. of th - Size								
		28	30	31	32	33	34	35	36	41
		8x10	10x12	12x14	15x17	17x20	21x24	26x30	38x34	60x65
01	Steel	•	•	•	•	•	•			
	Cast Iron	•	•	•	•	•	•			
21	Steel	•	•	•	•	•	•	•		
	Cast Iron	•	•	•	•	•	•	•		
31	Steel			•	•	•	•	•	•	
	Cast Iron			•	•	•	•	•	•	
40	Steel						•	•	•	
	Cast Iron						•	•	•	
60	Steel							•	•	•
	Cast Iron							•	•	•
80	Steel									•
	Cast Iron									•
90	Steel									•
	Cast Iron									•

Spline bores to DIN 5482

Size	Materials	Nr. of th - Size															
		8	9	10	12	13	14	15	16	17	18	19	20	21	22	23	24
		A15x12	A17x14	A18x15	A20x17	A22x19	A25x22	A28x25	A30x27	A32x28	A35x31	A38x34	A40x36	A42x38	A45x41	A48x44	A50x45
01	Steel	•	•	•	•	•	•										
	Cast Iron	•	•	•	•	•	•										
21	Steel	•	•	•	•	•	•	•	•	•	•	•					
	Cast Iron	•	•	•	•	•	•	•	•	•	•	•					
31	Steel							•	•	•	•	•					
	Cast Iron							•	•	•	•	•					
40	Steel																
	Cast Iron																
60	Steel																
	Cast Iron																
80	Steel																
	Cast Iron																
90	Steel																
	Cast Iron																

Size	Materials	Nr. of th - Size														
		25	26	27	28	29	30	31	32	33	34	35	36	37	38	39
		A52x47	A55x50	A58x53	A60x55	A62x57	A65x60	A68x62	A70x64	A72x66	A75x69	A78x72	A80x74	A82x76	A85x79	A88x82
01	Steel															
	Cast Iron															
21	Steel															
	Cast Iron															
31	Steel															
	Cast Iron															
40	Steel	•	•													
	Cast Iron	•	•													
60	Steel	•	•	•	•	•	•	•								
	Cast Iron	•	•	•	•	•	•	•								
80	Steel	•	•	•	•	•	•	•	•	•	•	•	•	•	•	•
	Cast Iron	•	•	•	•	•	•	•	•	•	•	•	•	•	•	•
90	Steel	•	•	•	•	•	•	•	•	•	•	•	•	•	•	•
	Cast Iron	•	•	•	•	•	•	•	•	•	•	•	•	•	•	•

AKG series

IEC electric motor range from size 63 up to size 225

Technical data

Couplings - IEC electric motor range from size 63 up to size 225

Materials
- Hubs: Aluminium, cast iron, steel
- Spider materials: NBR rubber 87 Sh A
  Polyurethane 95 Sh A

Compatibility with fluids
Modular bell-housing components compatible for use with:
- Mineral oils types HH-HL-HM-HR-HV, to ISO 6743/4 standard
- Water based emulsions types HFAE-HFAS, to ISO 6743/4 standard
- Water glycol type HFC, to ISO 6743/4 standard: ask for anodized version

Special Applications
Any applications not covered by the normal indications contained in this catalogue must be evaluated and approved by MP Filtri Technical and Sales Department

Standard ATEX Directive 2014/34/EU
and UK Regulation S.I. 2016 No. 1107 (as amended).

On request, it's possible to certificate the AKG according to ATEX CAT. 2G - Areas 1 - 2

Temperature
From -30 °C to +80 °C

Note
For temperatures outside this range, contact MP Filtri Technical and Sales Department

IEC Electric motors

Coupling size	European standard size 0.5	1	2	3	3.5	4	German standard size ZB	ZF	ZG	IEC Motors size
AKG02	●	●	●				●			**IEC 63 Ø140 - Ø11x23**
AKG03	●	●	●				●			**IEC 71 Ø160 - Ø14x30**
AKG04 / AKG05	●	●	●	●			●	●		**IEC 80 Ø200 - Ø19x40**
AKG07	●	●	●	●			●	●		**IEC 90 Ø200 - Ø24x50**
AKG07		●	●	●	●		●	●		**IEC 110 Ø250 - Ø28x60**
AKG11		●	●	●	●		●	●		**IEC 112 Ø250 - Ø28x60**
AKG12		●	●	●	●	●		●	●	**IEC 132 Ø300 - Ø38x80**
AKG13			●	●	●	●	●	●	●	**IEC 160 Ø350 - Ø42x110**
AKG13			●	●	●	●	●	●	●	**IEC 180 Ø350 - Ø48x110**
AKG16			●	●	●	●	●	●	●	**IEC 200 Ø400 - Ø55x110**
AKG18			●	●	●	●	●	●	●	**IEC 225 Ø450 - Ø60x140**

KIT COUPLING FOR GEAR PUMPS

Configuration example: AKG02 | FS200 | Z | EX

Motors identification code

	Size		Size
02	63 B3-B5	**13**	180 B3-B5
03	71 B3-B5	**43**	63 B14
04	80 B3-B5	**44**	71 B14
05	90 B3-B5	**45**	80 B14
07	100/112 B3-B5	**46**	90 B14
11	132 B3-B5	**48**	100/112 B14
12	160 B3-B5		

Pump flange identification code

FS200 See pages 43 - 44 - 45

Pump identification code

Z Revision index

ATEX certification identification code

EX ATEX Directive 2014/34/EU and UK Regulation S.I. 2016 No. 1107 (as amended)

KIT COUPLING FOR PISTON PUMPS VANES AND SCREWS

Configuration example: AKG | M01 | Z0000 | EX

Motors identification code

	Size		Size
M01	80 B3-B5	**M07**	200 B3-B5
M02	90 B3-B5	**M08**	225 B3-B5
M03	100/112 B3-B5	**M09**	250 B3-B5
M04	132 B3-B5	**M10**	280 B3-B5
M05	160 B3-B5	**M11**	315 B3-B5
M06	180 B3-B5	**M12**	355 B3-B5

Electric motor identification code

M01 See software

Pump identification code

Z0000 See software

ATEX certification identification code

EX ATEX Directive 2014/34/EU and UK Regulation S.I. 2016 No. 1107 (as amended)

NOTE:
The complete code of the coupling kit can be selected following the selection of electric motor and hydraulic pump on the B&C selection software available on www.mpfiltri.com

Dimensions

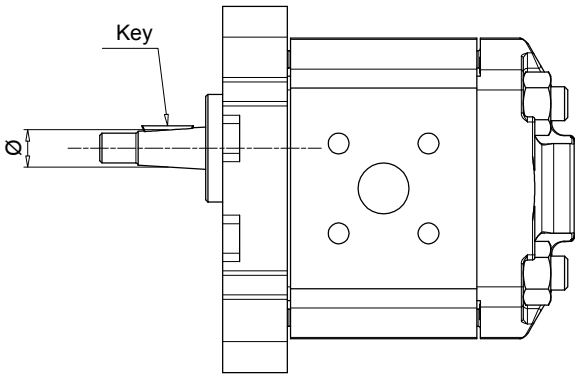

Shaft identification

Pump group	d	Key	Shaft type	Pump half-coupling code
05	6.0	2.0	parallel	**FS05M**
	7.0	2.0	parallel	**FS05C**
1	9.7	2.4	tapered 1:8	**FS100**
	12.0	3.0	parallel	**FS1C0**
	13.9	3.0	tapered 1:8	**FS1M0**
2	17.2	3.2 - 4	tapered 1:8	**FS200**
3	22.2	4.0	tapered 1:8	**FS300**
	22.2	4.0	tapered 1:8	**FS300**
	22.2	4.0	tapered 1:8	**FS300**
	22.2	4.0	tapered 1:8	**FS300**
3.5	25.6	4.76 - 5.0	tapered 1:8	**FS350**
	25.6	4.76 - 5.0	tapered 1:8	**FS350**
4	33.3	6.35 - 7.0	tapered 1:8	**FS400**
	33.3	6.35 - 7.0	tapered 1:8	**FS400**
Bosch	9.8	2.0	tapered 1:5	**FSZBR**
	16.9	3.0	tapered 1:5	**FSZFR**
	25.2	5.0	tapered 1:5	**FSZGR**

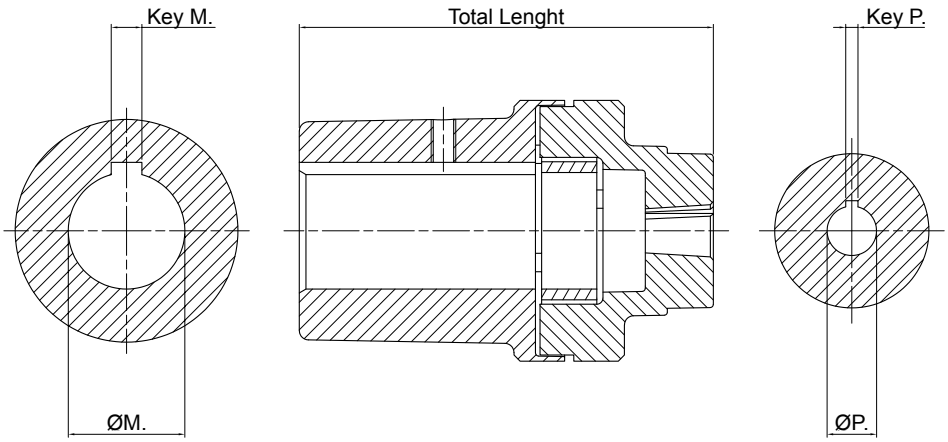

IEC Motors B3/5 - standard gear pump

IEC - Electric motors		Pump identification code	Components								
Motor size	Shaft end [Ø x L]		Motor half-coupling code	Spider code	Codice Semigiunto pompa	Complete coupling kit code	ØM.	Key M.	ØP.	Key P.	Tot. L.
63	11x23	**FS05M**	SGEA01M01019FG	EGE 0	SGEA01FS05M	AKG02FS05MZEX	11	4	6	2	50
		FS05C			SGEA01FS05C	AKG02FS05CZEX			7	2	
		FS100			SGEA01FS100	AKG02FS100ZEX			9.7-1:8	2.4	
		FS1C0			SGEA01FS1C0	AKG02FS1C0ZEX			12	3	
		FS1M0			SGEA01FS1M0	AKG02FS1M0ZEX			13.9-1:8	3	
		FSZBR			SGEA01FSZBR	AKG02FSZBRZEX			9.8-1:5	2	
71	14x30	**FS05M**	SGEA01M02028FG	EGE 0	SGEA01FS05M	AKG03FS05MZEX	14	5	6	2	59
		FS05C			SGEA01FS05C	AKG03FS05CZEX			7	2	
		FS100			SGEA01FS100	AKG03FS100ZEX			9.7-1:8	2.4	
		FS1C0			SGEA01FS1C0	AKG03FS1C0ZEX			12	3	
		FS1M0			SGEA01FS1M0	AKG03FS1M0ZEX			13.9-1:8	3	
		FSZBR			SGEA01FSZBR	AKG03FSZBRZEX			9.8-1:5	2	
80	19x40	**FS05M**	SGEA01M03048FG	EGE 0	SGEA01FS05M	AKG04FS05MZEX	19	6	6	2	80
		FS05C			SGEA01FS05C	AKG04FS05CZEX			7	2	
		FS100			SGEA01FS100	AKG04FS100ZEX			9.7-1:8	2.4	
		FS1C0			SGEA01FS1C0	AKG04FS1C0ZEX			12	3	
		FS1M0			SGEA01FS1M0	AKG04FS1M0ZEX			13.9-1:8	3	
		FSZBR			SGEA01FSZBR	AKG04FSZBRZEX			9.8-1:5	2	
		FS200	SGEA21M03048FG	EGE 2	SGEA21FS200	AKG04FS200ZEX	19	6	17.2-1:8	3.5/4	94
		FSZFR			SGEA21FSZFR	AKG04FSZFRZEX			16.9	3	
90	24x50	**FS05M**	SGEA01M04048FG	EGE 0	SGEA01FS05M	AKG05FS05MZEX	24	8	6	2	80
		FS05C			SGEA01FS05C	AKG05FS05CZEX			7	2	
		FS100			SGEA01FS100	AKG05FS100ZEX			9.7-1:8	2.4	
		FS1C0			SGEA01FS1C0	AKG05FS1C0ZEX			12	3	
		FS1M0			SGEA01FS1M0	AKG05FS1M0ZEX			13.9-1:8	3	
		FSZBR			SGEA01FSZBR	AKG05FSZBRZEX			9.8-1:5	2	
		FS200	SGEA21M04048FG	EGE 2	SGEA21FS200	AKG05FS200ZEX	24	8	17.2-1:8	3.5/4	94
		FSZFR			SGEA21FSZFR	AKG05FSZFRZEX			16.9	3	
100 112	28x60	**FS100**	SGEA21M05055FG	EGE 2	SGEA21FS100	AKG07FS100ZEX	28	8	9.7-1:8	2.4	94
		FS1C0			SGEA21FS1C0	AKG07FS1C0ZEX			12	3	
		FS1M0			SGEA21FS1M0	AKG07FS1M0ZEX			13.9-1:8	3	
		FSZBR			SGEA21FSZBR	AKG07FSZBRZEX			25.2-1:5	5	
		FS200			SGEA21FS200	AKG07FS200ZEX			17.2-1:8	3.2/4	
		FSZFR			SGEA21FSZFR	AKG07FSZFRZEX			16.9-1:5	3	
		FS25T			SGEA21FS300	AKG07FS300ZEX			22.22-1:8	4	
		FS300			SGEA21FS300	AKG07FS300ZEX			22.22-1:8	4	
		FS3M0			SGEA21FS300	AKG07FS300ZEX			22.22-1:8	4	
		FS3T0			SGEA21FS300	AKG07FS300ZEX			22.22-1:8	4	

IEC Motors B3/5 - standard gear pump

IEC - Electric motors		Pump identification code	Components								
Motor size	Shaft end [Ø x L]		Motor half-coupling code	Spider code	Pump half-coupling code	Complete coupling kit code	ØM.	Key M.	ØP.	Key P.	Tot. L.
132	38x80	**FS100**	SGEA31M06077FG	EGE 3	SGEA31FS100	AKG11FS100ZEX	38	10	9.7-1:8	2.4	135
		FS1C0			SGEA31FS1C0	AKG11FS1C0ZEX			12	3	
		FS1M0			SGEA31FS1M0	AKG11FS1M0ZEX			13.9-1:8	3	
		FSZGR			SGEA31FSZGR	AKG11FSZGRZEX			25.2-1:5	5	
		FS200			SGEA31FS200	AKG11FS200ZEX			17.2-1:8	3.2/4	
		FSZFR			SGEA31FSZFR	AKG11FSZFRZEX			16.9-1:5	3	
		FS25T			SGEA31FS300	AKG11FS300ZEX			22.22-1:8	4	
		FS300			SGEA31FS300	AKG11FS300ZEX			22.22-1:8	4	
		FS3M0			SGEA31FS300	AKG11FS300ZEX			22.22-1:8	4	
		FS3T0			SGEA31FS300	AKG11FS300ZEX			22.22-1:8	4	
		FS35M			SGEA31FS350	AKG11FS350ZEX			25.6-1:5	4.76/5	
		FS350			SGEA31FS350	AKG11FS350ZEX			25.6-1:5	4.76/5	
160	42x110	**FSZGR**	SGEA51M07109FG	EGE 5	SGEA51FSZGR	AKG12FSZGRZEX	42	12	25.2-1:5	5	167
		FS200			SGEA51FS200	AKG12FS200ZEX			17.2-1:8	3.2/4	
		FSZFR			SGEA51FSZFR	AKG12FSZFRZEX			16.9-1:5	3	
		FS25T			SGEA51FS300	AKG12FS300ZEX			22.22-1:8	4	
		FS300			SGEA51FS300	AKG12FS300ZEX			22.22-1:8	4	
		FS3M0			SGEA51FS300	AKG12FS300ZEX			22.22-1:8	4	
		FS3T0			SGEA51FS300	AKG12FS300ZEX			22.22-1:8	4	
		FS35M			SGEA51FS350	AKG12FS350ZEX			25.6-1:5	4.76/5	
		FS350			SGEA51FS350	AKG12FS350ZEX			25.6-1:5	4.76/5	
180	48x110	**FSZGR**	SGEA51M08109FG	EGE 5	SGEA51FSZGR	AKG13FSZGRZEX	48	14	25.2-1:5	5	167
		FS200			SGEA51FS200	AKG13FS200ZEX			17.2-1:8	3.2/4	
		FSZFR			SGEA51FSZFR	AKG13FSZFRZEX			16.9-1:5	3	
		FS25T			SGEA51FS300	AKG13FS300ZEX			22.22-1:8	4	
		FS300			SGEA51FS300	AKG13FS300ZEX			22.22-1:8	4	
		FS3M0			SGEA51FS300	AKG13FS300ZEX			22.22-1:8	4	
		FS3T0			SGEA51FS300	AKG13FS300ZEX			22.22-1:8	4	
		FS35M			SGEA51FS350	AKG13FS350ZEX			25.6-1:5	4.76/5	
		FS350			SGEA51FS350	AKG13FS350ZEX			25.6-1:5	4.76/5	
200	55x110	**FS200**	SGEA51M09109FG	EGE 5	SGEA51FS200	AKG16FS200ZEX	55	16	17.2-1:8	3.2/4	167
		FS300			SGEA51FS300	AKG16FS300ZEX			22.22-1:8	4	
		FS3M0			SGEA51FS300	AKG16FS300ZEX			22.22-1:8	4	
		FS35M			SGEA51FS350	AKG16FS350ZEX			25.6-1:5	4.76/5	
		FS350			SGEA51FS350	AKG16FS350ZEX			25.6-1:5	4.76/5	
		FSZFR			SGEA51FSZFR	AKG16FSZFRZEX			16.9-1:5	3	
		FSZGR			SGEA51FSZGR	AKG16FSZGRZEX			25.2-1:5	5	
225	60x140	**FS300**	SGEG60M10110	EGE 6	SGEG60FS300	AKG18FS300ZEX	60	18	22.22-1:8	4	167
		FS3M0			SGEG60FS300	AKG18FS300ZEX			22.22-1:8	4	
		FS35M			SGEG60FS350	AKG18FS350ZEX			25.6-1:5	4.76/5	
		FS350			SGEG60FS350	AKG18FS350ZEX			25.6-1:5	4.76/5	
		FSZGR			SGEG60FSZGR	AKG18FSZGRZEX			25.2-1:5	5	
250	65x140	**FS300**	SGEG60M11140	EGE 6	SGEG60FS300	AKG20FS300ZEX	65	18	22.22-1:8	4	168
		FS3M0			SGEG60FS300	AKG20FS300ZEX			22.22-1:8	4	
		FS35M			SGEG60FS350	AKG20FS350ZEX			25.6-1:5	4.76/5	
		FS350			SGEG60FS350	AKG20FS350ZEX			25.6-1:5	4.76/5	
		FSZGR			SGEG60FSZGR	AKG20FSZGRZEX			25.2-1:5	5	
280	75x140	**FS300**	SGEG80M12140	EGE 8	SGEG80FS300	AKG22FS300ZEX	75	20	22.22-1:8	4	198
		FS3M0			SGEG80FS300	AKG22FS300ZEX			22.22-1:8	4	
		FS35M			SGEG80FS350	AKG22FS350ZEX			25.6-1:5	4.76/5	
		FS350			SGEG80FS350	AKG22FS350ZEX			25.6-1:5	4.76/5	
		FSZGR			SGEG80FSZGR	AKG22FSZGRZEX			25.2-1:5	5	
315	80x170	**FS300**	SGEG80M13170	EGE 8	SGEG80FS300	AKG26FS300ZEX	80	22	22.22-1:8	4	228
		FS3M0			SGEG80FS300	AKG26FS300ZEX			22.22-1:8	4	
		FS35M			SGEG80FS350	AKG26FS350ZEX			25.6-1:5	4.76/5	
		FS350			SGEG80FS350	AKG26FS350ZEX			25.6-1:5	4.76/5	
		FSZGR			SGEG80FSZGR	AKG26FSZGRZEX			25.2-1:5	5	

IEC Electric motors B14 mounting

IEC - Electric motors Motor size	Shaft end [Ø x L]	Pump identification code	Components: Motor half-coupling code	Spider code	Pump half-coupling code	Complete coupling kit code	ØM.	Key M.	ØP.	Key P.	Tot. L.
63	11x23	**FS05M**	SGEA01M01019FG	EGE0	SGEA00FS05M	AKG43FS05MZEX	11	4	6	2	50
		FS05C			SGEA01FS05C	AKG43FS05CZEX			7	2	
		FS100			SGEA01FS100	AKG43FS100ZEX			9.7-1:8	2.4	
		FS1C0			SGEA01FS1C0	AKG43FS1C0ZEX			12	3	
		FS1M0			SGEA01FS1M0	AKG43FS1M0ZEX			13.9-1:8	3	
		FSZBR			SGEA01FSZBR	AKG43FSZBRZEX			9.8-1:5	2	
71	14x30	**FS05M**	SGEA01M02028FG	EGE 0	SGEA01FS05M	AKG44FS05MZEX	14	5	6	2	59
		FS05C			SGEA01FS05C	AKG44FS05CZEX			7	2	
		FS100			SGEA01FS100	AKG44FS100ZEX			9.7-1:8	2.4	
		FS1C0			SGEA01FS1C0	AKG44FS1C0ZEX			12	3	
		FS1M0			SGEA01FS1M0	AKG44FS1M0ZEX			13.9-1:8	3	
		FSZBR			SGEA01FSZBR	AKG44FSZBRZEX			9.8-1:5	2	
80	19x40	**FS05M**	SGEA01M03048FG	EGE 0	SGEA01FS05M	AKG45FS05MZEX	19	6	6	2	79
		FS05C			SGEA01FS05C	AKG45FS05CZEX			7	2	
		FS100			SGEA01FS100	AKG45FS100ZEX			9.7-1:8	2.4	
		FS1C0			SGEA01FS1C0	AKG45FS1C0ZEX			12	3	
		FS1M0			SGEA01FS1M0	AKG45FS1M0ZEX			13.9-1:8	3	
		FSZBR			SGEA01FSZBR	AKG45FSZBRZEX			9.8-1:5	2	
		FS200	SGEA21M03048FG	EGE 2	SGEA21FS200	AKG45FS200ZEX	19	6	17.2-1:8	3.2/4	87
		FSZFR			SGEA21FSZFR	AKG45FSZFRZEX			16.9	3	
90	24x50	**FS05M**	SGEA01M04048FG	EGE 0	SGEA01FS05M	AKG46FS05MZEX	24	8	6	2	79
		FS05C			SGEA01FS05C	AKG46FS05CZEX			7	2	
		FS100			SGEA01FS100	AKG46FS100ZEX			9.7-1:8	2.4	
		FS1C0			SGEA01FS1C0	AKG46FS1C0ZEX			12	3	
		FS1M0			SGEA01FS1M0	AKG46FS1M0ZEX			13.9-1:8	3	
		FSZBR			SGEA01FSZBR	AKG46FSZBRZEX			9.8-1:5	2	
		FS200	SGEA21M04048FG	EGE 2	SGEA21FS200	AKG46FS200ZEX	24	8	17.2-1:8	3.5/4	87
		FSZFR			SGEA21FSZFR	AKG46FSZFRZEX			16.9	3	
100 112	28x60	**FS05M**	SGEA21M05055FG	EGE 2	SGEA21FS05M	AKG48FS05MZEX	28	8	6	2	94
		FS05C			SGEA21FS05C	AKG48FS05CZEX			7	2	
		FS100			SGEA21FS100	AKG48FS100ZEX			9.7-1:8	2.4	
		FS1C0			SGEA21FS1C0	AKG48FS1C0ZEX			12	3	
		FS1M0			SGEA21FS1M0	AKG48FS1M0ZEX			13.9-1:8	3	
		FSZBR			SGEA21FSZBR	AKG48FSZBRZEX			9.8-1:5	2	
		FS200			SGEA21FS200	AKG48FS200ZEX			17.2-1:8	3.5/4	
		FSZFR			SGEA21FSZFR	AKG48FSZFRZEX			16.9	3	

SGDR series

Curved-tooth steel gear coupling

Technical data

Couplings - Curved-tooth steel gear coupling

Gear couplings materials
Couplings: Steel C40
Sleeve: Polyamide PA66 Blue color

Temperature
Sleeve Polyamide PA66: from -20 °C to +90 °C

Compatibility with fluids
- Mineral oils types HH-HL-HM-HR-HV, to ISO 6743/4 standard
- Water based emulsions types HFAE-HFAS, to ISO 6743/4 standard
- Water glycol type HFC, to ISO 6743/4 standard: ask for anodized version

Note
For temperatures outside this range, contact MP Filtri Technical and Sales Department

Special Applications
Any applications not covered by the normal indications contained in this catalogue must be evaluated and approved by MP Filtri Technical and Sales Department

IEC Electric motors

IEC Electric Motors size	C40 Carbon Steel				
	Shaft ISO 3019-2	Shaft ANSI B92. 1A 1976	Shaft DIN 5480	Shaft DIN 5481	Shaft DIN 5482
IEC 80 Ø200 - Ø19x40	●	●	●	●	●
IEC 90 Ø200 - Ø24x50	●	●	●	●	●
IEC 100 Ø250 - Ø28x60	●	●	●	●	●
IEC 112 Ø250 - Ø28x60	●	●	●	●	●
IEC 132 Ø300 - Ø38x80	●	●	●	●	●
IEC 160 Ø350 - Ø42x110	●	●	●	●	●
IEC 180 Ø350 - Ø48x110	●	●	●	●	●
IEC 200 Ø400 - Ø55x110	●	●	●	●	●

BLANK HALF-COUPLING

Configuration example: SGDR | 28 | PB

Pump half-coupling

SGDR

Size

28

42

55

Without bore

PB

HALF-COUPLING FOR PARALLEL SHAFT

Configuration example: SGDR | 28 | G02 | 040 | 2E

Pump half-coupling

SGDR

Size

28

42

55

Bore size code

G02 See page 18

Length

040 See page 50

Double key way (available combinations only)

2E See page 18 (Parallel shaft - double key only)

HALF-COUPLING FOR SPLINED SHAFT

Configuration example: SGDR | 28 | PD02 | 040

Pump half-coupling

SGDR

Size

28

42

55

Bore size code

PD02 See page 19

Length

040 See page 50

SGDR

Dimensions

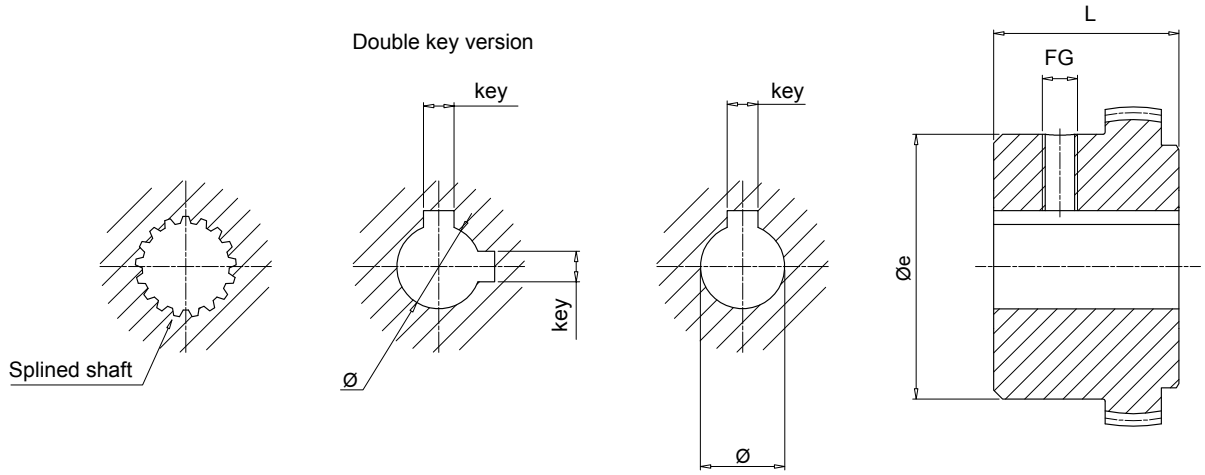

Notes:
- Screw included
- Double key version only pump side

Motor half-coupling

IEC - Electric motors		Half-coupling code	Dimensions [mm]					Weight [kg]
Motor size	Shaft end [Ø x L]		Øe	L	Ø	key	Fg	
80	19x40	**SGDR28M03040**	45	40	19	6	M6	0.5
90	24x50	**SGDR28M04040**	45	40	24	8	M6	0.5
100-112	28x60	**SGDR28M05040**	45	40	28	8	M6	0.5
132	38x80	**SGDR42M06042**	60	42	38	10	M8	1.0
160	42x110	**SGDR42M07042**	60	42	42	12	M8	1.0
180	48x110	**SGDR55M08060**	84	60	48	14	M8	2.5
200	55x110	**SGDR55M09060**	84	60	55	16	M8	2.5

Pump half-couplings

Half-coupling code	Dimensions [mm]		Weight [kg]
	Øe	L	
SGDR28***	45	40	0.5
SGDR42***	60	42	1.0
SGDR55***	84	60	2.5

Complete the half-coupling designation with the pump interface code and the length.
Example: **SGDR280PD02050** (see page 19).

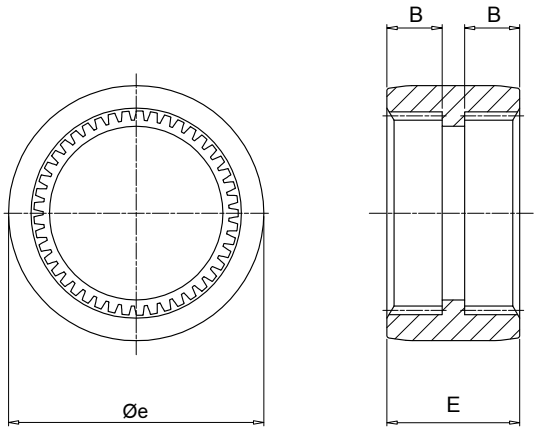

Sleeve

Code	Half-coupling code	Dimensions [mm]			Nominal torque [Nm]	Maximum torque [Nm]	Weight [kg]
		Øe	E	B			
EGR066PA	SGDR28	66	38	16	30	90	0.050
EGR090PA	SGDR42	90	52	22	120	360	0.150
EGR125PA	SGDR55	125	65	27	200	600	0.371

Bell-Housing are used as connecting elements between IEC motors and wide range of hydraulic pumps available on the international market.

Made in Aluminiun die cast, they cover a range from IEC motor size 63 to IEC motor size 355.

They are available in six different styles:
- **LMG series for gear pumps**
- **LMC series monobloc bell-housing**
- **LDC series made in 2 pcs fixed by screws**
- **LMS series able to reduce the noise**
- **LDS series made in 2 pcs fixed by screws**
- **MULTI-COMPONENTS made by 3 pcs for IEC motors from sizes 132 up to size 225, made by 2 pcs for IEC motors from size 250 up to size 355**

For the Bell-Housing selection you require please see our on-line software at www.mpfiltri.com.

Bell-Housing

GENERAL INFORMATION	page 54
LMG	59
LMC - LDC	71
LMS - LDS	79
MULTI-COMPONENTS	87

Noise is a particularly pervasive problem so much so that there have been statutory regulations in place now for some years, designed to limit harmful occupational exposure.
Many of the machines used in industry today are equipped with oil-hydraulic systems, which happen to be a major source of noise.

1 THEORY AND DEFINITION OF NOISE

From a health and hygiene standpoint, noise can be defined as an unpleasant and undesirable sound, or an unpleasant and annoying or intolerable auditory sensation (noise being any sound phenomena that may be accompanied by sensations of disturbance and pain). By definition, acoustic phenomena are oscillatory in character, propagated in a flexible medium and causing pressure variations at the points, and the areas adjacent to those points, through which they pass.

2 SOUND

Technically considered, certain elements must be present simultaneously for acoustic phenomena to occur:

- Sound source
- Transmission medium
- Receive

The electric motor and the pump, together with the drive coupling, are the SOURCE OF THE NOISE. The Bell-housing is the noise transmission MEDIUM. Depending on whether the monobloc bell-housing is a rigid or low noise type, there will be variations in the flexible properties of the transmission medium. The acoustic phenomena are dissimilar in the two cases, given the differences in pressure variation and particle displacement.

MOTOR AND PUMP UNIT

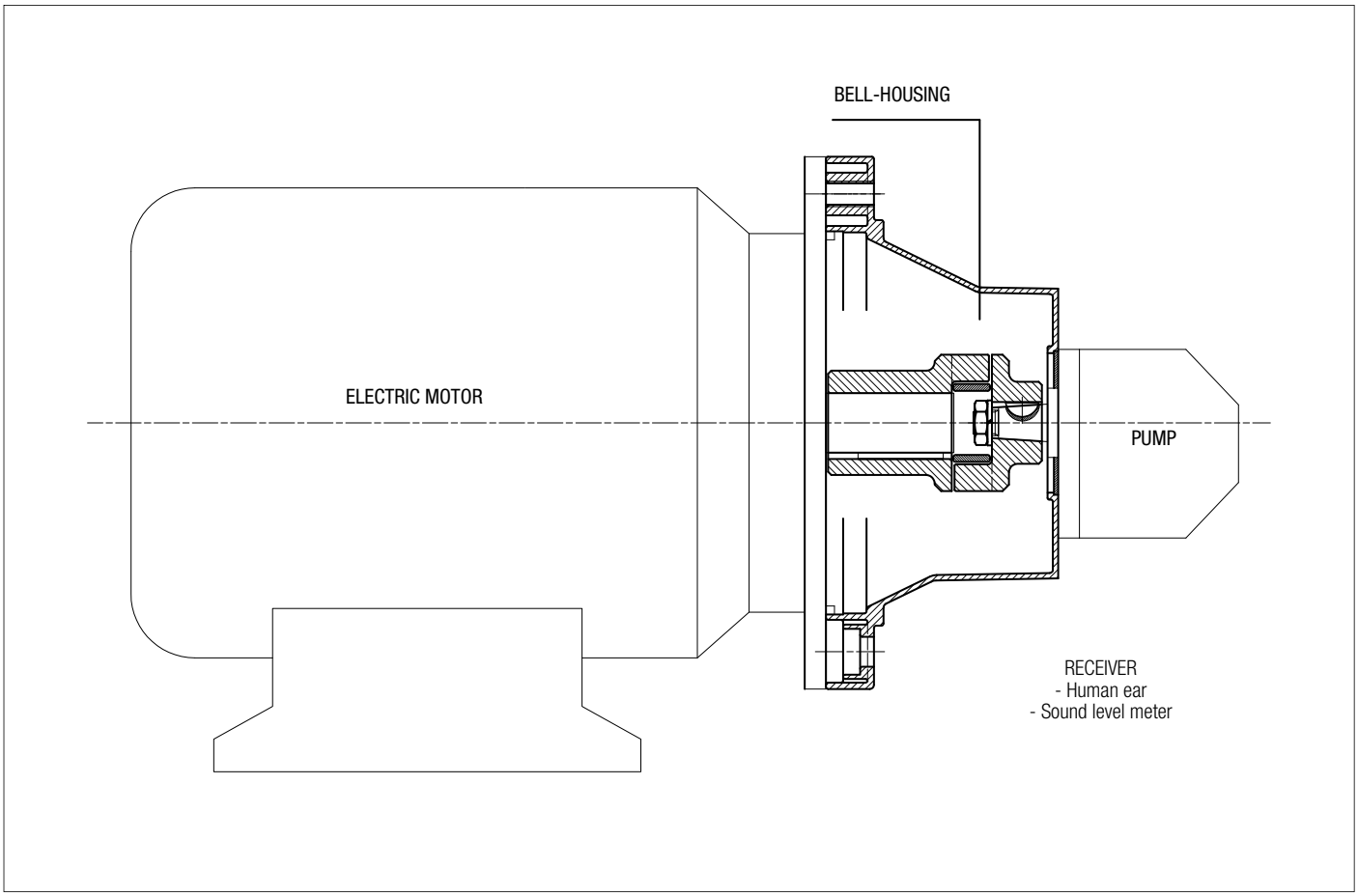

Low noise bell-housing will help to attenuate the transmission of vibrations and the emission of noise generated by the system.
Self-evidently, however, the mere adoption of a low noise bell-housing will achieve little unless the motor and pump are correctly installed on the machine or on the tank of the hydraulic power unit.

Should be followed in order to achieve best possible results and correct installation:

1 MOTOR AND PUMP UNIT MOUNTED HORIZONTALLY ON OIL TANK LID

- The suction pipe attached to the pump must be rigid and fitted using a resilient bulkhead flange of the FTA series, which helps to cushion the vibrations propagated between the pipe and the tank lid.
  If pipes need to be bent, the radius of curvature must be at least 3 times the pipe diameter.
  Do not use elbow fittings, as these will significantly increase pressure losses.

- The pressure pipeline of the pump must be flexible and long enough to include bends with the minimum radius of curvature recommended by the manufacturer for the specified operating pressure.

- The return pipeline running from the service to the filter must be flexible.
  Where oil is returned directly to the tank of the hydraulic power unit through a rigid pipe, it is advisable to use a resilient bulkhead flange of the FTR series, which helps to cushion the vibrations propagated between the pipe and the tank lid.

- Anti-vibration devices (resilient mounts or damping rods) must be located under the feet of the electric motor or the PDM foot brackets, depending on the mounting position of the motor.

- The lids of hydraulic oil tanks must be sturdy enough to support the load they carry.

2 MOTOR AND PUMP UNIT MOUNTED HORIZONTALLY ON MACHINE

- As a matter of good practice, the oil tank and motor-pump unit should be mounted on a single supporting frame of strength sufficient to support the load.

- If the hydraulic system is fitted with a side-mounted filter, the suction pipeline to the pump must be flexible and long enough to include bends with the minimum radius of curvature recommended by the manufacturer.

- If the suction filter is not side mounted, the pipeline should be rigid and installed in conjunction with a compensating coupling.

- The pressure pipeline of the pump must be flexible, and long enough to include bends with the minimum radius of curvature recommended by the manufacturer for the specified operating pressure.

- The return pipeline running from the service to the filter must be flexible.
  Where oil is returned directly to the tank of the hydraulic power unit through a rigid pipe, it is advisable to use a resilient bulkhead flange of the FTR series, which helps to cushion the vibrations propagated between the pipe and the tank lid.

- Anti-vibration devices (resilient mounts or damping rods) must be located under the feet of the electric motor or the PDM foot brackets, depending on the mounting position of the motor.

FINAL CONSIDERATION

For best results, in any event, the motor-and-pump unit should be incorporated into the hydraulic system in such a way that no one component is rigidly associated with another, resulting in the propagation of vibration, and consequently noise.

RECOMMENDED TIGHTENING TORQUES FOR MOTOR/PUMP FIXING ON THE BELL-HOUSING

M6	10 N·m	M16	205 N·m
M8	15 N·m	M18	280 N·m
M10	50 N·m	M20	400 N·m
M12	84 N·m	M22	530 N·m
M14	135 N·m	M24	690 N·m

Note: The above guidelines are indicative only and subordinate to the solutions adopted ultimately by design engineers.

Valid configuration for bell-housing up to Ø400

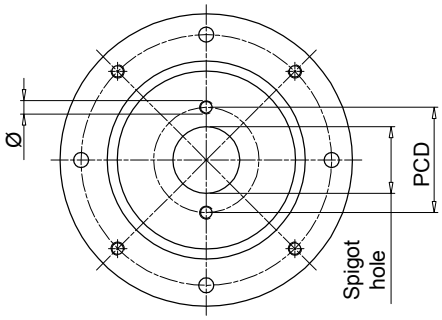

Bell-housing with nr. 2 holes at pump interface, aligned with through holes at motor interface.

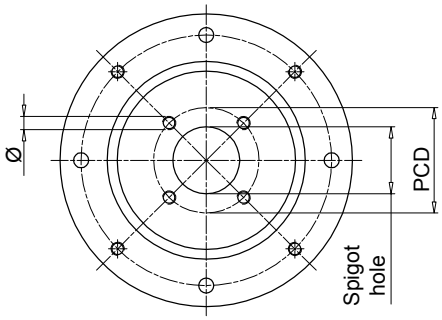

Bell-housing with nr. 4 holes at pump interface, aligned with thread holes at motor interface.

Valid configuration for bell-housing from Ø450 to Ø660

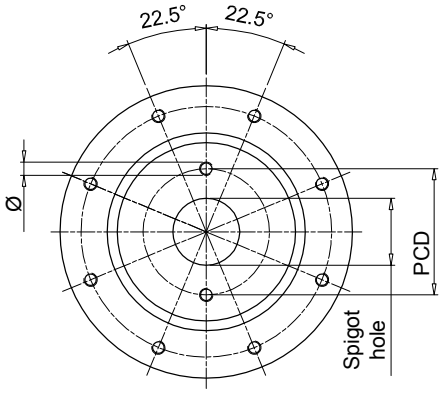

Bell-housing with nr. 2 holes at pump interface + 22.5° compared to through holes at motor interface.

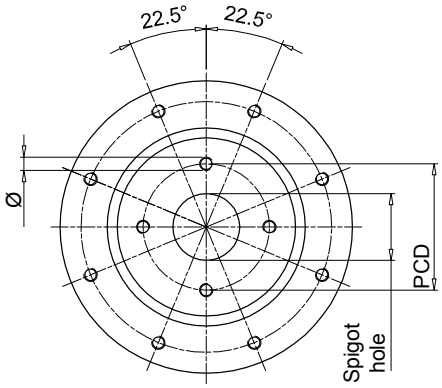

Bell-housing with nr. 4 holes at pump interface + 22.5° compared to thread holes at motor interface.

Spigot hole [mm]	PCD	Ø	Nr. holes	Code	Type
40	72.00	M8	2	**191**	-
45.2	88.90	M8	4	**096**	-
	71.80	M8	4	**120**	-
50	80.00	M8	2	**052**	ISO3019-2-50-B2
	93.00	M10	2	**053**	-
	60.00	M5	4	**280**	-
	63.00	Ø7	4	**057**	-
	93.00	M8	2	**287**	-
50.8	82.50	M8	2	**050**	SAE A-A 50-2
56	76.00	M6	4	**234**	-
57.15	106.40	Ø11	2	**212**	-
60	74.00	M10	4	**098**	-
	98.50	M6	4	**147**	-
	75.00	M6	4	**227**	-
62.7	157.20	M12	4	**231**	-
63	100.00	M8	2	**042**	ISO3019-2-63-B2
	125.00	M6	4	**043**	-
	85.00	M8	4	**044**	-
	80.00	M8	2	**051**	-
	80.00	Ø8.5	4	**058**	-
	100.00	M10	2	**062**	-
	85.00	M8	4	**168**	ISO3019-2-63-B4
	90.00	M8	4	**271**	-
65	90.00	M8	4	**073**	-
70	84.00	Ø7	4	**289**	-
71.8	88.90	M10	4	**047**	-
75	102.00	M10	4	**139**	-
80	100.00	M8	4	**024**	ISO3019-2-80-B4
	103.20	M8	2	**045**	ISO3019-2-80-B2
	100.00	Ø11	4	**059**	-
	100.00	M10	2	**061**	-
	110.00	M10	2	**063**	-
	140.00	M10	2	**064**	-
	115.00	M10	2	**065**	-
	100.00	M10	4	**067**	-
	106.40	M10	2	**083**	-
	130.00	M8	4	**087**	-
	100.00	Ø8.5	4	**093**	-
	113.00	M12	4	**104**	-
	95.00	M8	4	**169**	-
	103.00	M8	4	**242**	-
	110.00	M10	4	**272**	-
82.55	106.40	M10	2	**060**	SAE A 82-2
	105.00	M10	4	**097**	-
	106.40	M8	2	**254**	-
	146.00	M12	2	**260**	-
	110.00	M10	2	**284**	-
85	106.40	M10	2	**066**	-
90	112.00	M8	2	**134**	-
	105.00	M8	4	**156**	-
	118.00	Ø9	2	**163**	-
	112.00	Ø9	2	**164**	-
92	140.00	M8	4	**088**	-
	145.00	M10	4	**089**	-

"-": configuration out of ISO & SAE Standard

Spigot hole [mm]	PCD	Ø	Nr. holes	Code	Type
95	115.00	M8	4	**137**	-
	127.00	M10	4	**131**	-
98.4	125.00	Ø11	4	**128**	-
100	125.00	M10	2	**023**	ISO3019-2-100-B4
	125.00	M10	4	**025**	ISO3019-2-100-B2
	125.00	Ø11	4	**031**	-
	125.00	M5	4	**032**	-
	190.00	Ø15	4	**038**	-
	125.00	Ø13	4	**041**	-
	125.00	M12	2	**071**	-
	140.00	M12	2	**072**	-
	146.00	M12	2	**075**	-
	126.00	M10	2	**106**	-
	120.00	M8	4	**122**	-
	160.00	M10	4	**141**	-
	150.00	M10	4	**150**	-
101.6	161.50	M12	4	**029**	-
	146.00	M12	2	**070**	SAE B 101-2
	127.00	M12	4	**125**	-
	146.00	M10	2	**159**	-
	127.00	M10	4	**224**	-
105	146.00	M12	2	**076**	-
110	175.00	M10	4	**110**	-
	130.00	M8	4	**154**	-
	200.00	M10	4	**202**	-
	135.00	M10	4	**219**	-
	145.00	M12	4	**273**	-
112	140.00	M12	2	**074**	-
	140.00	M10	2	**138**	-
	130.00	M10	4	**264**	-
115	180.00	M12	4	**198**	-
116	160.00	M14	2	**084**	-
120	210.00	M16	2	**094**	-
	145.00	M10	4	**155**	-
	150.00	Ø13	4	**267**	-
125	160.00	M12	4	**026**	ISO3019-2-125-B4
	160.00	Ø13	4	**033**	-
	160.00	M12	2	**079**	-
	180.00	M16	2	**082**	ISO3019-2-125-B2
	155.00	M10	4	**102**	-
	160.00	Ø17	4	**113**	-
	200.00	M12	4	**114**	-
	181.20	M16	2	**136**	-
	200.00	M16	4	**200**	-
	180.00	ø20	4	**215**	-
	170.00	ø18	4	**237**	-
127	161.50	M12	4	**021**	-
	181.20	M16	2	**080**	SAE C 127-2
	161.50	M14	4	**140**	-
130	165.00	Ø11	4	**054**	-
	150.00	M12	4	**068**	-
	181.20	M16	2	**085**	-
	165.00	M12	4	**124**	-
	165.00	M14	4	**135**	-

"-": configuration out of ISO & SAE Standard

Spigot hole [mm]	PCD	Ø	Nr. holes	Code	Type
130	165.00	M10	4	**253**	-
135	160.00	M10	4	**151**	-
	175.40	M12	4	**220**	-
140	180.00	M14	4	**077**	ISO3019-2-140-B4
	180.00	M12	2	**081**	-
	165.00	M10	4	**157**	-
	200.00	M16	4	**176**	ISO3019-2-140-B2
	165.00	Ø11	4	**223**	-
	180.00	M16	2	**232**	-
150	185.00	M16	4	**069**	-
152.4	228.60	M16	4	**022**	-
	228.60	M18	2	**090**	-
	228.60	M18	4	**108**	-
	217.50	Ø17	4	**118**	-
	228.60	M20	2	**166**	SAE D 152-2
	228.60	M20	4	**192**	SAE D 152 -4
	190.50	M8	4	**207**	-
160	200.00	M16	4	**027**	ISO3019 - 2 -160 B4
	200.00	Ø17	4	**035**	-
	200.00	M16	2	**091**	-
	224.00	M20	2	**092**	ISO3019 - 2 -160 B2
	200.00	M12	2	**107**	-
	230.00	M22	4	**111**	-
	185.00	M12	4	**152**	-
	224.00	M16	4	**184**	-
	230.00	Ø22	4	**228**	-
162	188.00	M12	4	**263**	-
165.1	317.35	M20	4	**143**	SAE E 165 - 4
	317.35	M24	2	**145**	SAE E 165 - 2
	229.00	M20	4	**201**	-
	317.35	M18	4	**204**	-
175	200.00	M12	4	**153**	-
	230.00	M18	2	**185**	-
177.8	350.00	M24	4	**146**	SAE F 177 - 4
	216.00	M12	4	**222**	-
	350.00	M24	2	**203**	SAE F 177 - 2
180	216.00	Ø13	4	**055**	-
	216.00	M16	4	**078**	-
	224.00	M16	4	**112**	ISO3019 - 2 -180 B4
	216.00	M12	4	**132**	-
	215.00	M22	4	**148**	-
	230.00	M22	4	**226**	-
200	250.00	M20	4	**028**	ISO3019 - 2 -200 B4
	250.00	Ø22	4	**095**	-
	280.00	M24	2	**117**	-
	230.50	M12	4	**214**	-
203.2	254.00	M14	4	**210**	-
205	240.00	M16	4	**133**	-
224	280.00	M20	4	**144**	ISO3019 - 2 -224 B4
	280.00	Ø22	4	**205**	-
250	310.00	M24	4	**238**	-
	315.00	M20	4	**282**	ISO3019 - 2 -250 B4
275	355.00	M16	4	**233**	-
	355.00	Ø18	4	**281**	-

"-": configuration out of ISO & SAE Standard

LMG series

IEC electric motor range from size 63 up to size 225

Technical data

Bell-Housing - IEC electric motor range from size 63 up to size 225

Materials
- Bell-housing: Pressure die casting Aluminium
- Center ring: Galvanized Steel
- Gasket: Special paper - Guarnital

Compatibility with fluids
Modular bell-housing components compatible for use with:
- Mineral oils types HH-HL-HM-HR-HV, to ISO 6743/4 standard
- Water based emulsions types HFAE-HFAS, to ISO 6743/4 standard
- Water glycol type HFC, to ISO 6743/4 standard: ask for anodized version

Special Applications
Any applications not covered by the normal indications contained in this catalogue must be evaluated and approved by MP Filtri Technical and Sales Department

Temperature
From -30 °C to +80 °C

Note
For temperatures outside this range, contact MP Filtri Technical and Sales Department

IEC Electric motors

Bell-Housing size	European standard size 0.5	1	2	3	3.5	4	German standard size ZB	ZF	ZG	IEC Motors size
LMG140	●	●	●				●			**IEC 63 Ø140 - Ø11x23**
LMG160	●	●	●				●			**IEC 71 Ø160 - Ø14x30**
LMG200	●	●	●	●			●	●		**IEC 80 Ø200 - Ø19x40**
LMG200	●	●	●	●			●	●		**IEC 90 Ø200 - Ø24x50**
LMG250		●	●	●	●		●	●		**IEC 110 Ø250 - Ø28x60**
LMG250		●	●	●	●		●	●		**IEC 112 Ø250 - Ø28x60**
LMG300		●	●	●	●	●		●	●	**IEC 132 Ø300 - Ø38x80**
LMG351			●	●	●	●	●	●	●	**IEC 160 Ø350 - Ø42x110**
LMG351			●	●	●	●	●	●	●	**IEC 180 Ø350 - Ø48x110**
LMG400			●	●	●	●	●	●	●	**IEC 200 Ø400 - Ø55x110**
LMG450			●	●	●	●	●	●	●	**IEC 225 Ø450 - Ø60x140**

Note: For specific information see pages 66 ÷ 68 “Table of Combination”

LMG * 4S**

Without centre ring allowing removal of half-coupling (which as a rule is keyed permanently to the pump shaft); motor mounting flange drilled with 4 clearance holes + 4 threaded holes.
Used normally for vertically mounted motor and pump units with pump submerged in the oil tank.

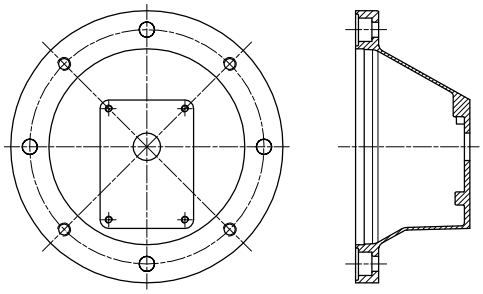

LMG * 4E**

With centre ring allowing removal of half-coupling (which as a rule is keyed permanently to the pump shaft), motor mounting flange drilled with 4 clearance holes + 4 threaded holes.
Normally used for motor and pump units mounted horizontally on the tank lid or on the machine for maximum ease of maintenance.
With this type of mounting, in effect, the hydraulic pump can be removed without removing the motor.
The half-coupling mounted to the shaft passes through the spigot hole.

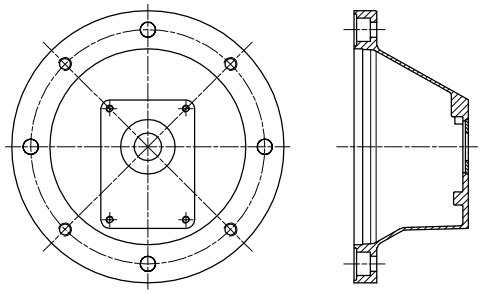

LMG * 8S**

Without centre ring allowing removal of half-coupling (which as a rule is keyed permanently to the pump shaft), motor mounting flange drilled with 8 clearance holes. Used normally for vertically mounted motor and pump units with pump submerged in the oil tank, allows greater flexibility for directional positioning of the hydraulic pump inside the tank, according to constructional requirements.

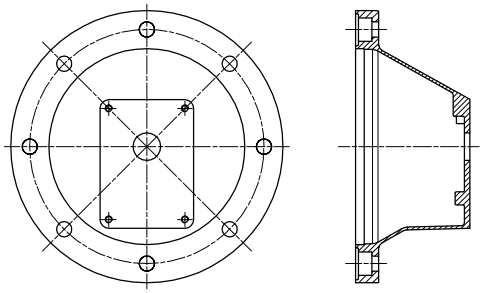

LMG * 8E**

With centre ring allowing removal of half-coupling (which as a rule is keyed permanently to the pump shaft), motor mounting flange drilled with 8 clearance holes.
Normally used for motor and pump units mounted horizontally on the tank lid or on the machine, offers maximum ease of maintenance and enables directional positioning of the pump.
With this type of mounting, in effect, the hydraulic pump can be removed without removing the motor.
The half-coupling mounted to the shaft passes through the spigot hole.

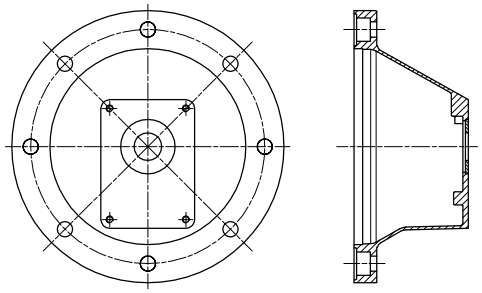

LMG

Designation & Ordering code

COMPLETE KIT (BELL-HOUSING & COUPLINGS)

Configuration example: AKA02 | FS200 | Z | 4E

Motors identification code

	Size		Size		Size
02	63 B3-B5	**13**	180 B3-B5	**44**	71 B14
03	71 B3-B5	**16**	200 B3-B5	**45**	80 B14
04	80 B3-B5	**18**	225 B3-B5	**46**	90 B14
05	90 B3-B5	**20**	250 B3-B5	**48**	100/112 B14
07	100/112 B3-B5	**22**	280 B3-B5		
11	132 B3-B5	**26**	315 B3-B5		
12	160 B3-B5	**43**	63 B14		

Pump flange identification code

FS200	See page 63

Product revision code

Z

Versions

4S	4 through holes + 4 threaded holes, motor interface without coupling removal ring
4E	4 through holes + 4 threaded holes, motor interface with coupling removal ring
8S	8 through holes, motor interface without coupling removal ring
8E	8 through holes, motor interface with coupling removal ring

BELL-HOUSING LMG

Configuration example: LMG140 | M | FS200 | 4E | DI

Bell-Housing series and size

LMG140	**LMG250**	**LMG450**
LMG141	**LMG251**	**LMG550**
LMG160	**LMG300**	**LMG660**
LMG161	**LMG350**	
LMG200	**LMG351**	
LMG201	**LMG400**	

Product revision code

M

Pump flange identification code

FS200	See page 63

Versions

4S	4 through holes + 4 threaded holes, motor interface without coupling removal ring
4E	4 through holes + 4 threaded holes, motor interface with coupling removal ring
8S	8 through holes, motor interface without coupling removal ring
8E	8 through holes, motor interface with coupling removal ring

Options

DI	Drain hole + inspection hole
AN	Black anodized finish
SA	Motor interface with clearance holes
Pxx	Customer specification

COUPLING KIT

Configuration example: AKG02 | FS200 | Z

Motors identification code

	Size		Size
02	63 B3-B5	**13**	180 B3-B5
03	71 B3-B5	**43**	63 B14
04	80 B3-B5	**44**	71 B14
05	90 B3-B5	**45**	80 B14
07	100/112 B3-B5	**46**	90 B14
11	132 B3-B5	**48**	100/112 B14
12	160 B3-B5		

Pumps flange identification code

FS200	See page 63

Product revision code

Z

Note:

- Bell-Housings with DI options are supplied complete with threaded closure plug.
- Bell-Housing with 4E/8E version are supplied with center ring mounted.
- For product range codes see pages 66 ÷ 68

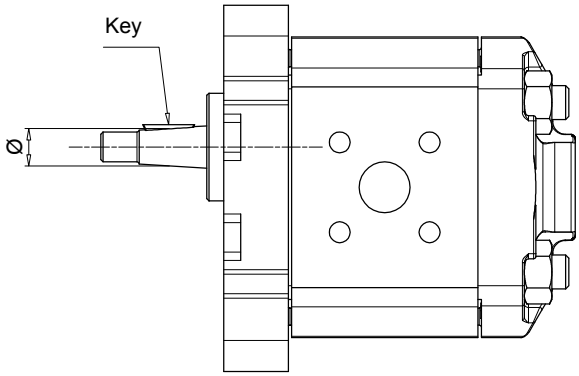

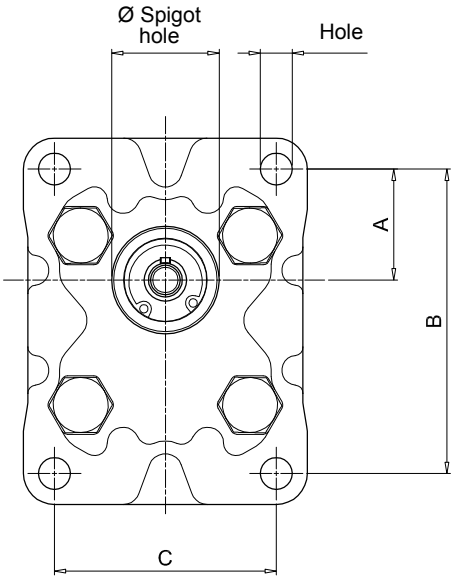

Designation of pump flange and shaft

Pump group	Ø Spigot hole	Dimensions A	B	C	Hole	Pump flange code	Ø	Key	Shaft type	Pump half-coupling code
05	22.0	25.5	66.0	-	M6	**FS05M**	6.0	2.0	parallel	**FS05M**
	22.0	25.5	66.0	-	M6	**FS05C**	7.0	2.0	parallel	**FS05C**
1	25.4	26.2	72.0	52.0	M6	**FS100**	9.7	2.4	tapered 1:8	**FS100**
	30.0	24.5	73.0	56.0	M6	**FS1M0**	12.0	3.0	parallel	**FS1C0**
	30.0	24.5	73.0	56.0	M6	**FS1M0**	13.9	3.0	tapered 1:8	**FS1M0**
2	36.5	32.5	96.0	71.5	M8	**FS200**	17.2	3.2 - 4	tapered 1:8	**FS200**
3	50.8	43.0	128.0	98.5	M8	**FS25T**	22.2	4.0	tapered 1:8	**FS300**
	50.8	42.0	128.0	98.5	M10	**FS300**	22.2	4.0	tapered 1:8	**FS300**
	50.8	43.0	128.0	98.5	M10	**FS3M0**	22.2	4.0	tapered 1:8	**FS300**
	50.8	45.0	137.0	98.5	M10	**FS3T0**	22.2	4.0	tapered 1:8	**FS300**
3.5	60.0	48.5	148.0	127.0	M12	**FS35M**	25.6	4.76 - 5.0	tapered 1:8	**FS350**
	60.3	49.5	149.5	114.3	M10	**FS350**	25.6	4.76 - 5.0	tapered 1:8	**FS350**
4	63.5	65.0	196.0	142.8	M12	**FS4M0**	33.3	6.35 - 7.0	tapered 1:8	**FS400**
	63.5	64.3	188.0	143.0	M12	**FS400**	33.3	6.35 - 7.0	tapered 1:8	**FS400**
Bosch	32.0	10.3	40.0	40.0	M8	**FSZBR**	9.8	2.0	tapered 1:5	**FSZBR**
	80.0	34.5	100.0	72.0	M8	**FSZFR**	16.9	3.0	tapered 1:5	**FSZFR**
	105.0	48.0	145.0	102.0	M10	**FSZGR**	25.2	5.0	tapered 1:5	**FSZGR**

Dimensions

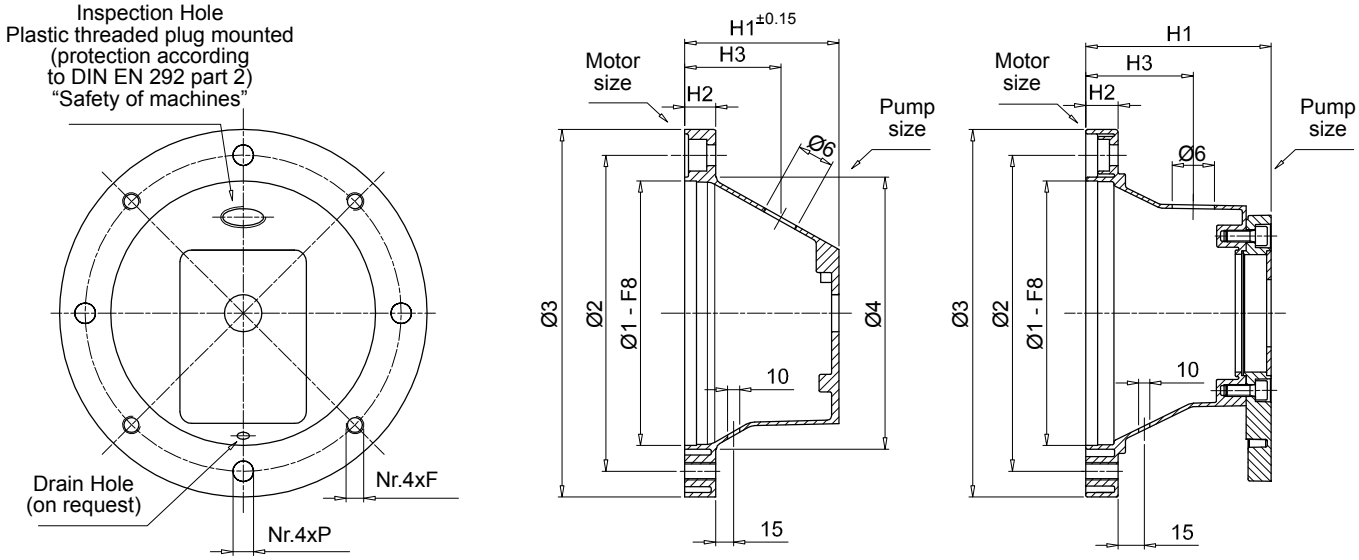

(*) Shape valid for LMG 251

Bell-housing

IEC - Electric motors		Bell-housing	Dimensions [mm]								On request		Weight
Motor size	Shaft end [Ø x L]	code	Ø1	Ø1	Ø3	Ø4	H1	H2	F	P	H3	Ø6	[kg]
63 - B14	11x23	**LMG090**	60	75	90	63	60	7	-	6	40	1/2"	0.30
71 - B14	14x30	**LMG105**	70	85	105	74	67	8	-	7	40	1/2"	0.35
80 - B14	19x40	**LMG120**	80	100	120	84	87	9	-	7	45	1/2"	0.40
63 - B3/B5	11x23	**LMG140**	95	115	140	100	60	13	M8	9	40	1/2"	0.35
63 - B3/B5	11x23	**LMG141**	95	115	140	100	95	13	M8	9	50	1/2"	0.40
71 - B3/B5	14x30	**LMG160**	110	130	160	110	70	15	M8	9	40	1/2"	0.44
71 - B3/B5	14x30	**LMG161**	110	130	160	110	105	15	M8	9	50	1/2"	0.50
80 - B3/B5	19x40	**LMG200**	130	165	200	135	87	18	M10	11	45	3/4"	0.68
90 - B3/B5	24x50	**LMG201**	130	165	200	135	95	18	M10	11	50	3/4"	0.80
100-112 - B3/B5	28x60	**LMG250**	180	215	250	185	105	22	M12	14	70	3/4"	1.16
100-112 - B3/B5	28x60	**LMG251 (*)**	180	215	250	185	126	22	M12	14	70	3/4"	1.80

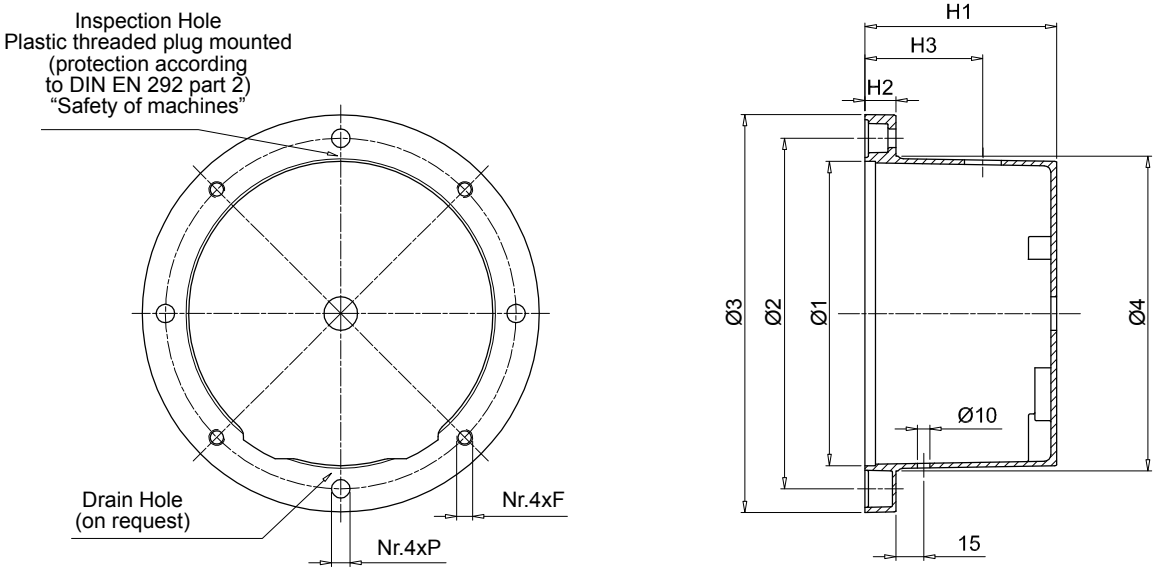

Bell-housing

IEC - Electric motors		Bell-housing	Dimensions [mm]								On request		Weight
Motor size	Shaft end [Ø x L]	code	Ø1	Ø2	Ø3	Ø4	H1	H2	F	P	H3	Ø6	[kg]
132	38x80	**LMG300**	230	265	300	235	145	23	M12	14	80	1"	2.55
160	42x110	**LMG351**	250	300	350	255	179	31	M16	18	100	1"	4.90
180	48x110	**LMG351**	250	300	350	255	179	31	M16	18	100	1"	4.90

IEC Motors B3/5 - standard gear pump

IEC - Electric motors		Pump identification code	Components					
Motor size	Shaft end [Ø x L]		Bell-Housing code	Motor half-coupling code	Spider code	Pump half-coupling code	Complete kit code	Complete coupling kit code
63	11x23	**FS05M**	LMG140MFS05M4S	SGEA01M01019FG	EGE 0	SGEA01FS05M	AKA02FS05MZ4S	AKG02FS05MZ
		FS05C	LMG140MFS05M4S			SGEA01FS05C	AKA02FS05CZ4S	AKG02FS05CZ
		FS100	LMG140MFS1004S/4E			SGEA01FS100	AKA02FS100Z4S/4E	AKG02FS100Z
		FS1C0	LMG140MFS1M04S/4E			SGEA01FS1C0	AKA02FS1C0Z4S/4E	AKG02FS1C0Z
		FS1M0	LMG140MFS1M04S/4E			SGEA01FS1M0	AKA02FS1M0Z4S/4E	AKG02FS1M0Z
		FSZBR	LMG140MFSZBR4S			SGEA01FSZBR	AKA02FSZBRZ4S	AKG02FSZBRZ
71	14x30	**FS05M**	LMG160MFS05M4S	SGEA01M02028FG	EGE 0	SGEA01FS05M	AKA03FS05MZ4S	AKG03FS05MZ
		FS05C	LMG160MFS05M4S			SGEA01FS05C	AKA03FS05CZ4S	AKG03FS05CZ
		FS100	LMG160MFS1004S/4E			SGEA01FS100	AKA03FS100Z4S/4E	AKG03FS100Z
		FS1C0	LMG160MFS1M04S/4E			SGEA01FS1C0	AKA03FS1C0Z4S/4E	AKG03FS1C0Z
		FS1M0	LMG160MFS1M04S/4E			SGEA01FS1M0	AKA03FS1M0Z4S/4E	AKG03FS1M0Z
		FSZBR	LMG160MFSZBR4S			SGEA01FSZBR	AKA03FSZBRZ4S	AKG03FSZBRZ
80	19x40	**FS05M**	LMG200MFS05M4S	SGEA01M03048FG	EGE 0	SGEA01FS05M	AKA04FS05MZ4S	AKG04FS05MZ
		FS05C	LMG200MFS05M4S			SGEA01FS05C	AKA04FS05CZ4S	AKG04FS05CZ
		FS100	LMG200MFS1004S/4E			SGEA01FS100	AKA04FS100Z4S/4E	AKG04FS100Z
		FS1C0	LMG200MFS1M04S/4E			SGEA01FS1C0	AKA04FS1C0Z4S/4E	AKG04FS1C0Z
		FS1M0	LMG200MFS1M04S/4E			SGEA01FS1M0	AKA04FS1M0Z4S/4E	AKG04FS1M0Z
		FSZBR	LMG200MFSZBR4S			SGEA01FSZBR	AKA04FSZBRZ4S	AKG04FSZBRZ
		FS200	LMG201MFS2004S/4E	SGEA21M03048FG	EGE 2	SGEA21FS200	AKA04FS200Z4S/4E	AKG04FS200Z
		FSZFR	LMG201MFSZFR4S			SGEA21FSZFR	AKA04FSZFRZ4S	AKG04FSZFRZ
90	24x50	**FS05M**	LMG200MFS05M4S	SGEA01M04048FG	EGE 0	SGEA01FS05M	AKA05FS05MZ4S	AKG05FS05MZ
		FS05C	LMG200MFS05M4S			SGEA01FS05C	AKA05FS05CZ4S	AKG05FS05CZ
		FS100	LMG200MFS1004S/4E			SGEA01FS100	AKA05FS100Z4S/4E	AKG05FS100Z
		FS1C0	LMG200MFS1M04S/4E			SGEA01FS1C0	AKA05FS1C0Z4S/4E	AKG05FS1C0Z
		FS1M0	LMG200MFS1M04S/4E			SGEA01FS1M0	AKA05FS1M0Z4S/4E	AKG05FS1M0Z
		FSZBR	LMG200MFSZBR4S			SGEA01FSZBR	AKA05FSZBRZ4S	AKG05FSZBRZ
		FS200	LMG201MFS2004S/4E	SGEA21M04048FG	EGE 2	SGEA21FS200	AKA05FS200Z4S/4E	AKG05FS200Z
		FSZFR	LMG201MFSZFR4S			SGEA21FSZFR	AKA05FSZFRZ4S	AKG05FSZFRZ
100 112	28x60	**FS100**	LMG250MFS1004S	SGEA21M05055FG	EGE 2	SGEA21FS100	AKA07FS100Z4S	AKG07FS100Z
		FS1C0	LMG250MFS1M04S			SGEA21FS1C0	AKA07FS1C0Z4S	AKG07FS1C0Z
		FS1M0	LMG250MFS1M04S			SGEA21FS1M0	AKA07FS1M0Z4S	AKG07FS1M0Z
		FSZBR	LMG250MFSZBR4S			SGEA21FSZBR	AKA07FSZBRZ4S	AKG07FSZBRZ
		FS200	LMG250MFS2004S/4E			SGEA21FS200	AKA07FS200Z4S/4E	AKG07FS200Z
		FSZFR	LMG250MFSZFR4S			SGEA21FSZFR	AKA07FSZFRZ4S	AKG07FSZFRZ
		FS25T	LMG251MFS25T4E			SGEA21FS300	AKA07FS25TZ4E	AKG07FS300Z
		FS300	LMG251MFS3004E			SGEA21FS300	AKA07FS300Z4E	AKG07FS300Z
		FS3M0	LMG251MFS3M04E			SGEA21FS300	AKA07FS3M0Z4E	AKG07FS300Z
		FS3T0	LMG251MFS3T04E			SGEA21FS300	AKA07FS3T0Z4E	AKG07FS300Z
132	38x80	**FS100**	LMG300MFS1004S	SGEA31M06077FG	EGE 3	SGEA31FS100	AKA11FS100Z4S	AKG11FS100Z
		FS1C0	LMG300MFS1M04S			SGEA31FS1C0	AKA11FS1C0Z4S	AKG11FS1C0Z
		FS1M0	LMG300MFS1M04S			SGEA31FS1M0	AKA11FS1M0Z4S	AKG11FS1M0Z
		FSZGR	LMG300MFSZGR4S			SGEA31FSZGR	AKA11FSZGRZ4S	AKG11FSZGRZ
		FS200	LMG300MFS2004S/4E			SGEA31FS200	AKA11FS200Z4S/4E	AKG11FS200Z
		FSZFR	LMG300MFSZFR4S			SGEA31FSZFR	AKA11FSZFRZ4S	AKG11FSZFRZ
		FS25T	LMG300MFS25T4S/4E			SGEA31FS300	AKA11FS25TZ4S/4E	AKG11FS300Z
		FS300	LMG300MFS3004S/4E			SGEA31FS300	AKA11FS300Z4S/4E	AKG11FS300Z
		FS3M0	LMG300MFS3M04S/4E			SGEA31FS300	AKA11FS3M0Z4S/4E	AKG11FS300Z
		FS3T0	LMG300MFS3T04S/4E			SGEA31FS300	AKA11FS3T0Z4S/4E	AKG11FS300Z
		FS35M	LMG300MFS35M4S/4E			SGEA31FS350	AKA11FS35MZ4S/4E	AKG11FS350Z
		FS350	LMG300MFS3504S/4E			SGEA31FS350	AKA11FS350Z4S/4E	AKG11FS350Z

Note:
- For bell-housing dimensions see pages 64-65.
- For coupling dimensions see “Half-couplings” section on pages 26-27.

IEC Motors B3/5 - standard gear pump

IEC - Electric motors		Pump identification code	Components					
Motor size	Shaft end [Ø x L]		Bell-Housing code	Motor half-coupling code	Spider code	Pump half-coupling code	Complete kit code	Complete coupling kit code
160	42x110	**FSZGR**	LMG351MFSZGR4S	SGEA51M07109FG	EGE 5	SGEA51FSZGR	AKA12FSZGRZ4S	AKG12FSZGRZ
		FS200	LMG351MFS2004S			SGEA51FS200	AKA12FS200Z4S	AKG12FS200Z
		FSZFR	LMG351MFSZFR4S			SGEA51FSZFR	AKA12FSZFRZ4S	AKG12FSZFRZ
		FS25T	LMG351MFS25T4S/4E			SGEA51FS300	AKA12FS25TZ4S/4E	AKG12FS300Z
		FS300	LMG351MFS3004S/4E			SGEA51FS300	AKA12FS300Z4S/4E	AKG12FS300Z
		FS3M0	LMG351MFS3M04S/4E			SGEA51FS300	AKA12FS3M0Z4S/4E	AKG12FS300Z
		FS3T0	LMG351MFS3T04S/4E			SGEA51FS300	AKA12FS3T0Z4S/4E	AKG12FS300Z
		FS35M	LMG351MFS35M4S/4E			SGEA51FS350	AKA12FS35MZ4S/4E	AKG12FS350Z
		FS350	LMG351MFS3504S/4E			SGEA51FS350	AKA12FS3504ZS/4E	AKG12FS350Z
180	48x110	**FSZGR**	LMG351MFSZGR4S	SGEA51M08109FG	EGE 5	SGEA51FSZGR	AKA13FSZGRZ4S	AKG13FSZGRZ
		FS200	LMG351MFS2004S			SGEA51FS200	AKA13FS200Z4S	AKG13FS200Z
		FSZFR	LMG351MFSZFR4S			SGEA51FSZFR	AKA13FSZFRZ4S	AKG13FSZFRZ
		FS25T	LMG351MFS25T4S/4E			SGEA51FS300	AKA13FS25TZ4S/4E	AKG13FS300Z
		FS300	LMG351MFS3004S/4E			SGEA51FS300	AKA13FS300Z4S/4E	AKG13FS300Z
		FS3M0	LMG351MFS3M04S/4E			SGEA51FS300	AKA13FS3M0Z4S/4E	AKG13FS300Z
		FS3T0	LMG351MFS3T04S/4E			SGEA51FS300	AKA13FS3T04ZS/4E	AKG13FS300Z
		FS35M	LMG351MFS35M4S/4E			SGEA51FS350	AKA13FS35MZ4S/4E	AKG13FS350Z
		FS350	LMG351MFS3504S/4E			SGEA51FS350	AKA13FS350Z4S/4E	AKG13FS350Z
200	55x110	**FS200**	LMG400MFS2004E	SGEA51M09109FG	EGE 5	SGEA51FS200	AKA16FS200Z4S	AKG16FS200Z
		FS300	LMG400MFS3004E			SGEA51FS300	AKA16FS300Z4E	AKG16FS300Z
		FS3M0	LMG400MFS3M04E			SGEA51FS300	AKA16FS3M0Z4E	AKG16FS300Z
		FS35M	LMG400MFS35M4E			SGEA51FS350	AKA16FS35MZ4E	AKG16FS350Z
		FS350	LMG400MFS3504E			SGEA51FS350	AKA16FS350Z4E	AKG16FS350Z
		FSZFR	LMG400MFSZFR4S			SGEA51FSZFR	AKA16FSZFRZ4E	AKG16FSZFRZ
		FSZGR	LMG400MFSZGR4S			SGEA51FSZGR	AKA16FSZGRZ4E	AKG16FSZGRZ
225	60x140	**FS300**	LMG450MFS3004E	SGEG60M10110	EGE 6	SGEG60FS300	AKA18FS300Z4E	AKG18FS300Z
		FS3M0	LMG450MFS3M04E			SGEG60FS300	AKA18FS3M0Z4E	AKG18FS300Z
		FS35M	LMG450MFS35M4E			SGEG60FS350	AKA18FS35MZ4E	AKG18FS350Z
		FS350	LMG450MFS3504E			SGEG60FS350	AKA18FS350Z4E	AKG18FS350Z
		FSZGR	LMG450MFSZGR4S			SGEG60FSZGR	AKA18FSZGRZ4E	AKG18FSZGRZ
250	65x140	**FS300**	LMG550MFS3004E	SGEG60M11140	EGE 6	SGEG60FS300	AKA20FS300Z4E	AKG20FS300Z
		FS3M0	LMG550MFS3M04E			SGEG60FS300	AKA20FS3M0Z4E	AKG20FS300Z
		FS35M	LMG550MFS35M4E			SGEG60FS350	AKA20FS35MZ4E	AKG20FS350Z
		FS350	LMG550MFS3504E			SGEG60FS350	AKA20FS350Z4E	AKG20FS350Z
		FSZGR	LMG550MFSZGR4S			SGEG60FSZGR	AKA20FSZGRZ4E	AKG20FSZGRZ
280	75x140	**FS300**	LMG550MFS3004E	SGEG80M12140	EGE 8	SGEG80FS300	AKA22FS300Z4E	AKG22FS300Z
		FS3M0	LMG550MFS3M04E			SGEG80FS300	AKA22FS3M0Z4E	AKG22FS300Z
		FS35M	LMG550MFS35M4E			SGEG80FS350	AKA22FS35MZ4E	AKG22FS350Z
		FS350	LMG550MFS3504E			SGEG80FS350	AKA22FS350Z4E	AKG22FS350Z
		FSZGR	LMG550MFSZGR4S			SGEG80FSZGR	AKA22FSZGRZ4E	AKG22FSZGRZ
315	80x170	**FS300**	LMG660MFS3004E	SGEG80M13170	EGE 8	SGEG80FS300	AKA26FS300Z4E	AKG26FS300Z
		FS3M0	LMG660MFS3M04E			SGEG80FS300	AKA26FS3M0Z4E	AKG26FS300Z
		FS35M	LMG660MFS35M4E			SGEG80FS350	AKA26FS35MZ4E	AKG26FS350Z
		FS350	LMG660MFS3504E			SGEG80FS350	AKA26FS350Z4E	AKG26FS350Z
		FSZGR	LMG660MFSZGR4S			SGEG80FSZGR	AKA26FSZGRZ4E	AKG26FSZGRZ

Note:
- For bell-housing dimensions see pages 64-65.
- For coupling dimensions see “Half-couplings” section on pages 26-27.

IEC Electric motors B14 mounting

IEC - Electric motors		Pump identification code	Components					
Motor size	Shaft end [Ø x L]		Bell-Housing code	Motor half-coupling code	Spider code	Pump half-coupling code	Complete kit code	Complete coupling kit code
63	11x23	**FS05M**	LMG090MFS05M4E	SGEA01M01019FG	EGE0	SGEA00FS05M	AKA43FS05MZ4E	AKG43FS05MZ
		FS05C	LMG090MFS05M4E			SGEA01FS05C	AKA43FS05CZ4E	AKG43FS05CZ
		FS100	LMG090MFS1004E			SGEA01FS100	AKA43FS100Z4E	AKG43FS100Z
		FS1C0	LMG090MFS1M04E			SGEA01FS1C0	AKA43FS1C0Z4E	AKG43FS1C0Z
		FS1M0	LMG090MFS1M04E			SGEA01FS1M0	AKA43FS1M0Z4E	AKG43FS1M0Z
		FSZBR	LMG090MFSZBR4E			SGEA01FSZBR	AKA43FSZBRZ4E	AKG43FSZBRZ
71	14x30	**FS05M**	LMG105MFS05M4E	SGEA01M02028FG	EGE 0	SGEA01FS05M	AKA44FS05MZ4E	AKG44FS05MZ
		FS05C	LMG105MFS05M4E			SGEA01FS05C	AKA44FS05CZ4E	AKG44FS05CZ
		FS100	LMG105MFS1004E			SGEA01FS100	AKA44FS100Z4E	AKG44FS100Z
		FS1C0	LMG105MFS1C04E			SGEA01FS1C0	AKA44FS1C0Z4E	AKG44FS1C0Z
		FS1M0	LMG105MFS1M04E			SGEA01FS1M0	AKA44FS1M0Z4E	AKG44FS1M0Z
		FSZBR	LMG105MFSZBR4E			SGEA01FSZBR	AKA44FSZBRZ4E	AKG44FSZBRZ
80	19x40	**FS05M**	LMG120MFS05M4E	SGEA01M03048FG	EGE 0	SGEA01FS05M	AKA45FS05MZ4E	AKG45FS05MZ
		FS05C	LMG120MFS05M4E			SGEA01FS05C	AKA45FS05CZ4E	AKG45FS05CZ
		FS100	LMG120MFS1004E			SGEA01FS100	AKA45FS100Z4E	AKG45FS100Z
		FS1C0	LMG120MFS1M04E			SGEA01FS1C0	AKA45FS1C0Z4E	AKG45FS1C0Z
		FS1M0	LMG120MFS1M04E			SGEA01FS1M0	AKA45FS1M0Z4E	AKG45FS1M0Z
		FSZBR	LMG120MFSZBR4S			SGEA01FSZBR	AKA45FSZBRZ4E	AKG45FSZBRZ
		FS200	LMG121MFS2004E	SGEA21M03048FG	EGE 2	SGEA21FS200	AKA45FS200Z4E	AKG45FS200Z
		FSZFR	LMG121MFSZFR4S			SGEA21FSZFR	AKA45FSZFRZ4S	AKG45FSZFRZ
90	24x50	**FS05M**	LMG141MFS05M4S	SGEA01M04048FG	EGE 0	SGEA01FS05M	AKA46FS05MZ4E	AKG46FS05MZ
		FS05C	LMG141MFS05M4S			SGEA01FS05C	AKA46FS05CZ4E	AKG46FS05CZ
		FS100	LMG141MFS1004S/4E			SGEA01FS100	AKA46FS100Z4E	AKG46FS100Z
		FS1C0	LMG141MFS1M04S/4E			SGEA01FS1C0	AKA46FS1C0Z4E	AKG46FS1C0Z
		FS1M0	LMG141MFS1M04S/4E			SGEA01FS1M0	AKA46FS1M0Z4E	AKG46FS1M0Z
		FSZBR	LMG141MFSZBR4S			SGEA01FSZBR	AKA46FSZBRZ4E	AKG46FSZBRZ
		FS200	LMG141MFS2004S/4E	SGEA21M04048FG	EGE 2	SGEA21FS200	AKA46FS200Z4E	AKG46FS200Z
		FSZFR	LMG141MFSZFR4S			SGEA21FSZFR	AKA46FSZFRZ4S	AKG46FSZFRZ
100 112	28x60	**FS05M**	LMG161MFS05M4S	SGEA21M05055FG	EGE 2	SGEA21FS05M	AKA48FS05MZ4E	AKG48FS05MZ
		FS05C	LMG161MFS05M4S			SGEA21FS05C	AKA48FS05CZ4E	AKG48FS05CZ
		FS100	LMG161MFS1004S			SGEA21FS100	AKA48FS100Z4E	AKG48FS100Z
		FS1C0	LMG161MFS1M04S			SGEA21FS1C0	AKA48FS1C0Z4E	AKG48FS1C0Z
		FS1M0	LMG161MFS1M04S			SGEA21FS1M0	AKA48FS1M0Z4E	AKG48FS1M0Z
		FSZBR	LMG161MFSZBR4S			SGEA21FSZBR	AKA48FSZBRZ4E	AKG48FSZBRZ
		FS200	LMG161MFS2004S/4E			SGEA21FS200	AKA48FS200Z4E	AKG48FS200Z
		FSZFR	LMG161MFSZFR4S			SGEA21FSZFR	AKA48FSZFRZ4S	AKG48FSZFRZ

Note:
- For bell-housing dimensions see pages 64-65.
- For coupling dimensions see “Half-couplings” section on pages 26-27.

CENTER RING

Center ring code	Dimensions [mm] Ø1	Ø2	Thk.
ANC01FS100	50	25.4	1.0
ANC01FS1M0	50	30.0	1.0
ANC02FS200	72	36.5	2.0
ANC03FS200	88	36.5	2.0
ANC03FS300	88	50.8	2.5
ANC03FS350	88	60.3	2.5
ANC04FS300	115	50.8	3.5
ANC04FS350	115	60.3	3.5
ANCA001	42	22.0	1.0
ANCD005	85	50.8	2.5

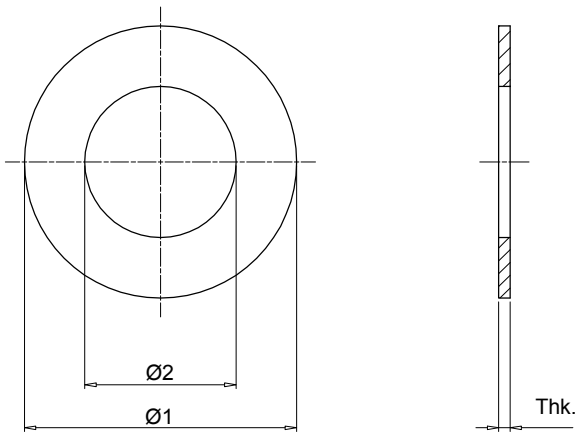

Center ring code	Bell-Housing size LMG090	LMG105	LMG120	LMG140	LMG160	LMG200	LMG250	LMG300	LMG350	LMG400	LMG450
ANC01FS100	●	●	●	●	●						
ANC01FSM0	●	●	●	●	●						
ANC02FS200			●	●	●	●	●				
ANC03FS200								●			
ANC03FS300								●			
ANC03FS350								●			
ANC04FS200									●	●	●
ANC04FS300									●	●	●
ANC04FS350									●	●	●
ANCA001	●	●	●	●	●		●				
ANCD005						●	●	●	●		

GASKET

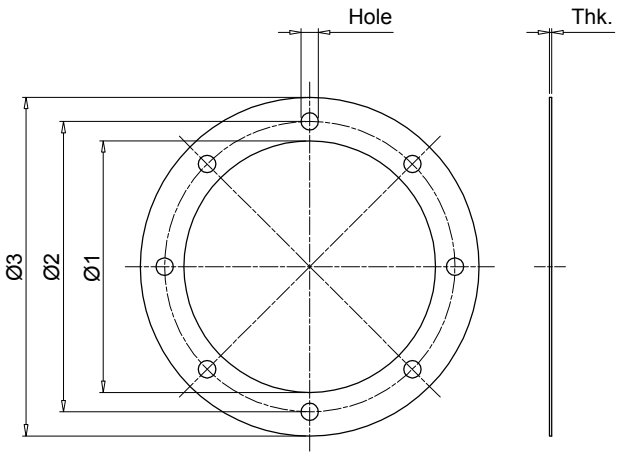

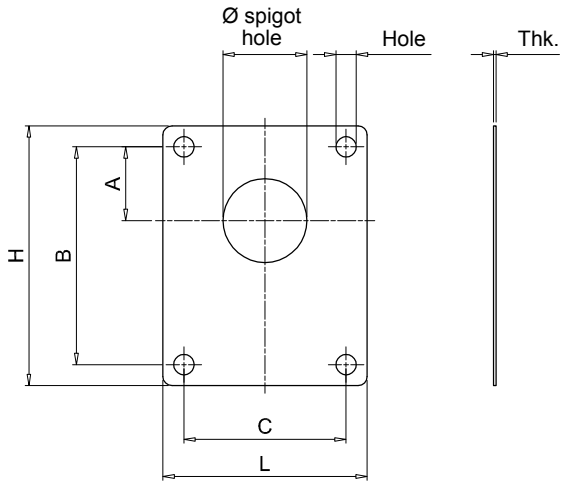

Motor side gasket

Bell-housing size	Seals code	Dimensions [mm] Ø1	Ø2	Ø3	Thk.	Hole
LMG 120	**GUM P 120**	84	100	120	1	7
LMG 140	**GUM P 140**	96	115	140	1	9
LMG 160	**GUM P 160**	110	130	160	1	9
LMG 200	**GUM P 200**	145	165	200	1	11
LMG 250	**GUM P 250**	190	215	250	1	14
LMG 300	**GUM P 300**	234	265	300	1	14
LMG 350	**GUM P 350**	260	300	350	1	18

Pump side gasket

Pump identification code	Seals code	Dimensions [mm] Ø	A	B	C	H	L	Thk.	Hole
FS05M	**GUP P001**	22.0	25.6	66	-	80	48	1	6.5
FS100	**GUP P002**	25.4	26.6	72	52.4	87	67	1	6.5
FS1M0	**GUP P003**	30.0	24.5	73	56.0	85	68	1	6.5
FS200	**GUP P004**	36.5	32.5	96	71.5	112	88	1	8.5
FS300	**GUP P005**	50.8	43.0	128	98.5	148	118	1	10.5
FSZBR	**GUP P013**	32.0	10.35	40	40.0	75	62	1	8.5
FSZFR	**GUP P014**	80.0	34.5	100	72.0	118	90	1	9.0

LMC/LDC series

IEC electric motor range from size 80 up to size 355

Technical data

Bell-Housing - IEC electric motor range from size 80 up to size 355

Materials
- Monobloc bell-housing: Pressure die-cast aluminium alloy
- Pump flange: Pressure die-cast aluminium alloy
- Screws kit: Steel
- Gaskets: Special paper (Guarnital)
- Plug for inspection: Polyamide

Temperature
From -30 °C to +80 °C

Note
For temperatures outside this range, contact MP Filtri Technical and Sales Department

Compatibility with fluids
Modular bell-housing components compatible for use with:
- Mineral oils types HH-HL-HM-HR-HV, to ISO 6743/4 standard
- Water based emulsions types HFAE-HFAS, to ISO 6743/4 standard
- Water glycol type HFC, to ISO 6743/4 standard: ask for anodized version

Special Applications
Any applications not covered by the normal indications contained in this catalogue must be evaluated and approved by MP Filtri Technical and Sales Department

Range

Bell-Housing size	Flange ISO 3019-2							IEC Motors size
	50 B2-B4	63 B2-B4	80 B2-B4	100 B2-B4	125 B2-B4	160 B2-B4	200 B2-B4	
LMC200	●	●	●	●				**IEC 80 Ø200 - Ø19x40**
LMC200	●	●	●	●				**IEC 90 Ø200 - Ø24x50**
LMC250	●	●	●	●	●			**IEC 100 Ø250 - Ø28x60**
LMC250	●	●	●	●	●			**IEC 112 Ø250 - Ø28x60**
LMC300			●	●	●	●		**IEC 132 Ø300 - Ø38x80**
LMC350			●	●	●	●		**IEC 160 Ø350 - Ø42x110**
LMC350			●	●	●	●	●	**IEC 180 Ø350 - Ø48x110**
LMC400			●	●	●	●	●	**IEC 200 Ø400 - Ø55x110**
LMC450			●	●	●	●	●	**IEC 225 Ø450 - Ø60x140**
LMC550					●	●	●	**IEC 250 Ø550 - Ø65x140**
LMC550					●	●	●	**IEC 280 Ø550 - Ø75x140**
LMC660					●	●	●	**IEC 315 Ø660 - Ø80x170**

Bell-Housing size	Flange SAE J 744										IEC Motors size
	50-2 (A-A)	82-2 (A)	101-2 (B)	127-2 (C)	152-2 (D)	165-2 (E)	101-4 (B)	127-4 (D)	152-4 (D)	165-4 (E)	
LMC200	●	●									**IEC 80 Ø200 - Ø19x40**
LMC200	●	●									**IEC 90 Ø200 - Ø24x50**
LMC250	●	●	●				●				**IEC 100 Ø250 - Ø28x60**
LMC250	●	●	●	●			●				**IEC 112 Ø250 - Ø28x60**
LMC300		●	●	●			●	●			**IEC 132 Ø300 - Ø38x80**
LMC350		●	●	●			●	●			**IEC 160 Ø350 - Ø42x110**
LMC350		●	●	●	●		●	●	●		**IEC 180 Ø350 - Ø48x110**
LMC400		●	●	●	●	●	●	●	●	●	**IEC 200 Ø400 - Ø55x110**
LMC450			●	●	●	●		●	●	●	**IEC 225 Ø450 - Ø60x140**
LMC550				●	●	●		●	●	●	**IEC 250 Ø550 - Ø65x140**
LMC550				●	●	●		●	●	●	**IEC 280 Ø550 - Ø75x140**
LMC660				●	●	●		●	●	●	**IEC 315 Ø660 - Ø80x170**

Designation & Ordering code

LMC

Configuration example: LMC200AFSJ | 070 | DI

Bell-Housing series and size

LMC200AFSJ	**LMC350AFSU**
LMC200AFSW	**LMC400AFSV**
LMC250AFSM	**LMC450AFSZ**
LMC250AFSQ	**LMC550AFSN**
LMC250AFSR	**LMC550AFSO**
LMC300AFST	**LMC660AFSP**
LMC300AFSX	**LMC660AFSS**
LMC350AFSY	

Pump interface codes

070	See page 56

Options

DI	Drain hole + inspection hole
FR	Holes rotated through 45° in relation to standard position
DP	Double set of hole
AN	Black anodized finish
SA	Clearance holes at motor interface
Pxx	Customer specification

LDC

Configuration example: LDC200AFRB | 070 | DI

Bell-Housing series and size

LDC200AFRB	**LDC350AF6B**
LDC200AFRC	**LDC400AF5A**
LDC200AFRD	**LDC400AF5B**
LDC250AFRC	**LDC400AF6A**
LDC300AFRC	**LDC400AF6B**
LDC300AF5A	**LDC450AF6A**
LDC300AF5B	**LDC450AF6B**
LDC350AF6A	

Pump interface codes

070	See page 56

Options

DI	Drain hole + inspection hole
FR	Holes rotated through 45° in relation to standard position
DP	Double set of hole
AN	Black anodized finish
SA	Clearance holes at motor interface
Pxx	Customer specification

Note:
- Bell-housings with DI options are supplied complete with threaded closure plug.
- For customization features other than those indicated on this page, contact MP Filtri Technical and Sales Department.

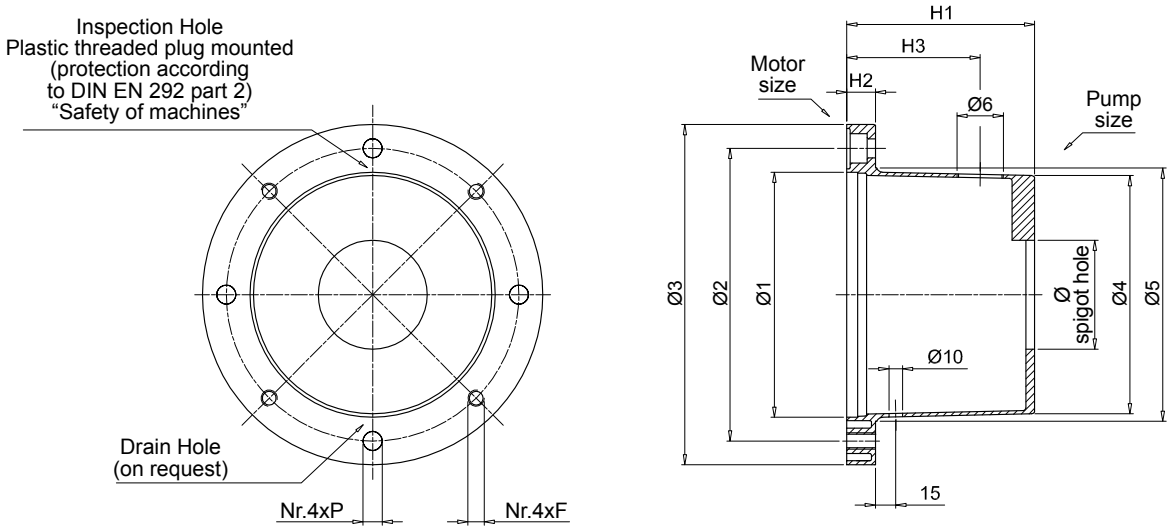

IEC - Electric motors Motor size	Shaft end [Ø x L]	Bell-housing code	Dimensions [mm] Ø1	Ø2	Ø3	Ø4	Ø5	H1	H2	F	P	On request H3	Ø6	Ø spigot hole Minimum [mm]	Weight [kg]
80	19x40	**LMC200AFSJ*****	130	165	200	125	135	100	18	M10	11	60	3/4"	50	0.75
90	24x50	**LMC200AFSW*****	130	165	200	125	135	125	18	M10	11	85	3/4"	50	0.95
110 - 112	28x60	**LMC250AFSM*****	180	215	250	175	186	114	19	M12	14	75	3/4"	50	1.50
		LMC250AFSQ***	180	215	250	175	186	138	19	M12	14	100	3/4"	50	1.60
		LMC250AFSR***	180	215	250	175	186	159	19	M12	14	120	3/4"	50	1.75
132	38x80	**LMC300AFST*****	230	265	300	230	235	155	23	M12	14	80	3/4"	80	3.20
		LMC300AFSX***	230	265	300	230	235	170	23	M12	14	95	3/4"	80	3.30
160	42x110	**LMC350AFSY*****	250	300	350	240	254	178	31	M16	18	95	1"	50	4.80
180	48x110	**LMC350AFSU*****	250	300	350	240	254	194	31	M16	18	115	1"	80	4.90
200	55x110	**LMC400AFSV*****	300	350	400	280	305	201	31	M16	18	125	1 1/2"	80	6.50

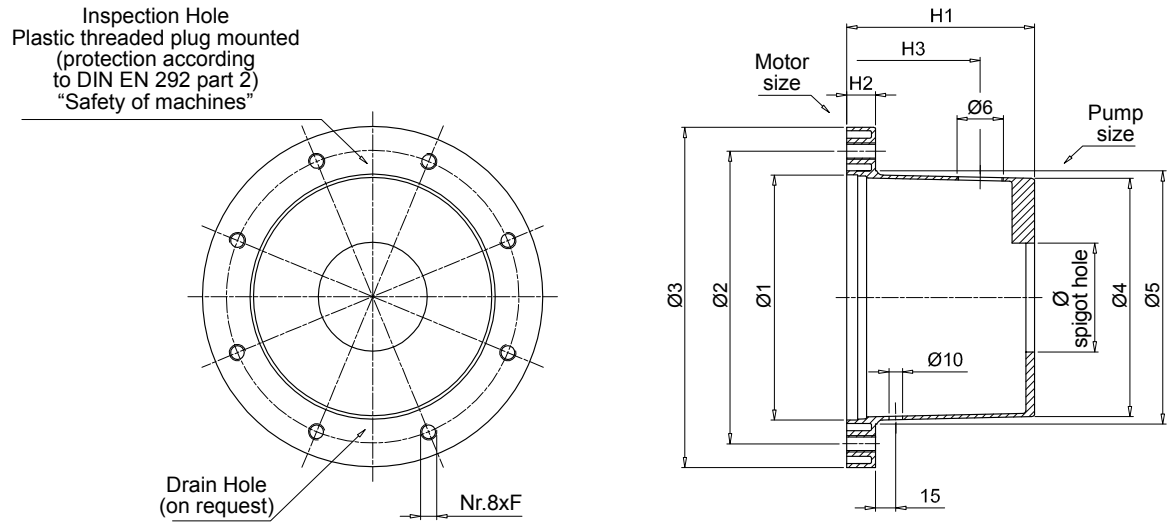

IEC - Electric motors Motor size	Shaft end [Ø x L]	Bell-housing code	Dimensions [mm] Ø1	Ø2	Ø3	Ø4	Ø5	H1	H2	F	P	On request H3	Ø6	Ø spigot hole Minimum [mm]	Weight [kg]
225	60x140	**LMC450AFSZ*****	350	400	450	320	350	250	31	M16	-	175	1 1/2"	80	9.00
250	65x140	**LMC550AFSN*****	450	500	550	-	-	265	31	M16	-	175	1 1/2"	100	15.00
280	75x140	**LMC550AFSO*****	450	500	550	-	-	310	35	M16	-	175	1 1/2"	100	17.00
315	80x170	**LMC660AFSP*****	550	600	660	-	-	295	45	M20	-	175	1 1/2"	100	27.00
		LMC660AFSS***	550	600	660	-	-	325	45	M20	-	175	1 1/2"	100	31.00

Dimensions

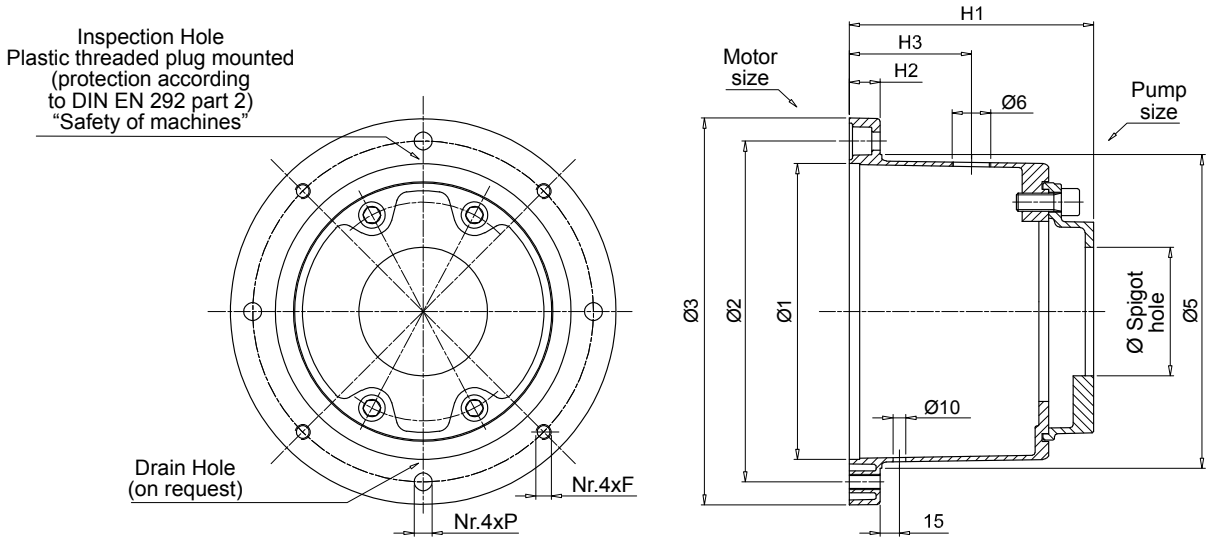

IEC - Electric motors		Bell-housing	Dimensions [mm]								On request		Ø spigot hole	Weight
Motor size	Shaft end [Ø x L]	code	Ø1	Ø2	Ø3	Ø5	H1	H2	F	P	H3	Ø6	Minimum [mm]	[kg]
80	19x40	**LDC200AFRB*****	130	165	200	135	125	18	M10	11	60	3/4"	50	1.85
90	24x50	**LDC200AFRC*****	130	165	200	135	133	18	M10	11	60	3/4"	50	1.95
		LDC200AFRD***	130	165	200	135	158	18	M10	11	75	3/4"	50	2.10
110 - 112	28x60	**LDC250AFRC*****	180	215	250	186	169	19	M12	14	100	3/4"	50	2.75
132	38x80	**LDC300AFRC*****	230	265	300	235	185	23	M12	14	95	3/4"	50	4.60
		LDC300AF5A***	230	265	300	235	190	23	M12	14	95	3/4"	80	4.50
		LDC300AF5B***	230	265	300	235	181	23	M12	14	95	3/4"	80	4.80
160	42x110	**LDC350AF6A*****	250	300	350	254	239	31	M16	18	115	1"	80	6.80
180	48x110	**LDC350AF6B*****	250	300	350	254	252	31	M16	18	115	1"	80	7.30
200	55x110	**LDC400AF5A*****	300	350	400	305	246	31	M16	18	125	1 1/2"	80	7.50
		LDC400AF5B***	300	350	400	305	234	31	M16	18	125	1 1/2"	80	7.90
		LDC400AF6A***	300	350	400	305	246	31	M16	18	125	1 1/2"	80	8.50
		LDC400AF6B***	300	350	400	305	260	31	M16	18	125	1 1/2"	80	9.00

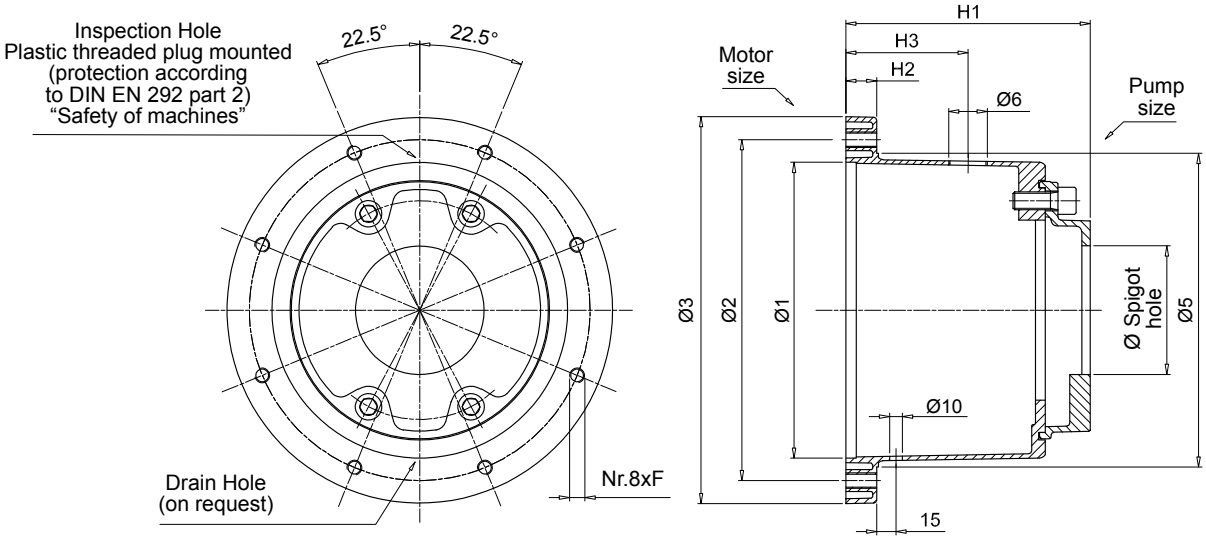

IEC - Electric motors		Bell-housing	Dimensions [mm]								On request		Ø spigot hole	Weight
Motor size	Shaft end [Ø x L]	code	Ø1	Ø2	Ø3	Ø5	H1	H2	F	P	H3	Ø6	Minimum [mm]	[kg]
225	60x140	**LDC450AF6A*** **	350	400	450	350	295	31	M16	-	175	1 1/2"	80	11.20
		LDC450AF6B* **	350	400	450	350	308	31	M16	-	175	1 1/2"	80	11.60

Comparative table

MP Filtri code	KTR code	OMT code	Raja code	Hydrapp code
LMC200A* **	PK200/3/...	TH20A***	R200/99-115/...	-
LMC200A* **	PL200/8/...	TH1***	R200/120-135/...	HLC1
LMC250A* **	PL250/6/...	TH2***	R250/120-135/...	HLC3
LMC300A* **	PL300/4/...	TH3***	R300/155-170/...	HLC5
LMC350A* **	PK350/4/...	TH4***	R350/173-194/...	HLC8
LMC400A* **	PK400/4/...	TH15***	R400/194-210/...	HLC12
LMC450A* **	PK450/4/...	TH18***	R450/250-210/...	-
LMC550A* **	PK550/4/...	TH19***	R550/250-210/...	-
LMC660A* **	PK660/4/...	TH20***	R660/250-210/...	-

Note:
The above table is gudeline only.
Not all bell-housings are fully interchangeble.

LMS/LDS series

IEC electric motor range from size 100 up to size 315

Technical data

Bell-Housing - IEC electric motor range from size 100 up to size 315

Materials
- Motor base bell-housing: Pressure die-cast aluminium alloy
- Pump flange: Pressure die-cast aluminium alloy
- Internal ring: Pressure die-cast aluminium alloy
- Damping ring: Vulcanized aluminium + NBR 75 Shore A

Compatibility with fluids
Modular bell-housing components compatible for use with:
- Mineral oils types HH-HL-HM-HR-HV, to ISO 6743/4 standard
- Water based emulsions types HFAE-HFAS, to ISO 6743/4 standard
- Water glycol type HFC, to ISO 6743/4 standard: ask for anodized version

Special Applications
Any applications not covered by the normal indications contained in this catalogue must be evaluated and approved by MP Filtri Technical and Sales Department

Temperature
From -30 °C to +80 °C

Note
For temperatures outside this range, contact MP Filtri Technical and Sales Department

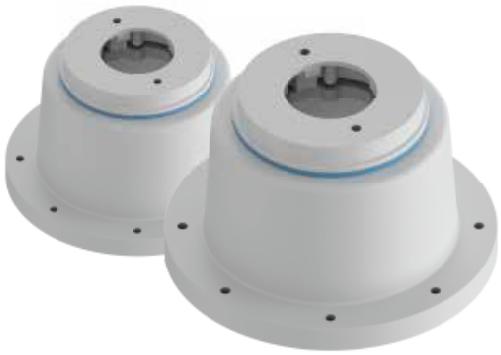

Range

Bell-Housing size	Flange ISO 3019-2							IEC Motors size
	50 B2-B4	63 B2-B4	80 B2-B4	100 B2-B4	125 B2-B4	160 B2-B4	200 B2-B4	
LMS250	●	●	●	●	●			**IEC 100 Ø250 - Ø28x60**
LMS250	●	●	●	●	●			**IEC 112 Ø250 - Ø28x60**
LMS300			●	●	●	●		**IEC 132 Ø300 - Ø38x80**
LMS350			●	●	●	●		**IEC 160 Ø350 - Ø42x110**
LMS350			●	●	●	●	●	**IEC 180 Ø350 - Ø48x110**
LMS400			●	●	●	●	●	**IEC 200 Ø400 - Ø55x110**
LMS450			●	●	●	●	●	**IEC 225 Ø450 - Ø60x140**
LMS550					●	●	●	**IEC 250 Ø550 - Ø65x140**
LMS550					●	●	●	**IEC 280 Ø550 - Ø75x140**
LMS660					●	●	●	**IEC 315 Ø660 - Ø80x170**

Bell-Housing size	Flange SAE J 744										IEC Motors size
	50-2 (A-A)	82-2 (A)	101-2 (B)	127-2 (C)	152-2 (D)	165-2 (E)	101-4 (B)	127-4 (D)	152-4 (D)	165-4 (E)	
LMS250	●	●	●				●				**IEC 100 Ø250 - Ø28x60**
LMS250	●	●	●	●			●				**IEC 112 Ø250 - Ø28x60**
LMS300		●	●	●			●	●			**IEC 132 Ø300 - Ø38x80**
LMS350		●	●	●			●	●			**IEC 160 Ø350 - Ø42x110**
LMS350		●	●	●	●		●	●	●		**IEC 180 Ø350 - Ø48x110**
LMS400		●	●	●	●	●	●	●	●	●	**IEC 200 Ø400 - Ø55x110**
LMS450			●	●	●	●		●	●	●	**IEC 225 Ø450 - Ø60x140**
LMS550				●	●	●		●	●	●	**IEC 250 Ø550 - Ø65x140**
LMS550				●	●	●		●	●	●	**IEC 280 Ø550 - Ø75x140**
LMS660				●	●	●		●	●	●	**IEC 315 Ø660 - Ø80x170**

LMS/LDS

Designation & Ordering code

LMS

Configuration example: LMS250AFSA | 070 | DI

Bell-Housing series and size

LMS250AFSA	**LMS400AFSL**
LMS250AFSB	**LMS400AFSM**
LMS300AFSC	**LMS400AFSN**
LMS300AFSD	**LMS450AFSO**
LMS300AFSE	**LMS550AFSP**
LMS350AFSF	**LMS550AFSR**
LMS350AFSG	**LMS660AFST**
LMS350AFSH	

Pump interface codes

070	See page 56

Options

DI	Drain hole + inspection hole
FR	Holes rotated through 45° in relation to standard position
DP	Double set of hole
AN	Black anodized finish
SA	Clearance holes at motor interface
Pxx	Customer specification

LDS

Configuration example: LDS250AFRA | 070 | DI

Bell-Housing series and size

LDS250AFRA	**LDS450AF6A**
LDS250AFBB	**LDS550AF6A**
LDS250AFRE	**LDS660AF6A**
LDS300AFRB	
LDS300AFRC	
LDS300AF5G	
LDS350AF5A	
LDS400AF6A	

Pump interface codes

070	See page 56

Options

DI	Drain hole + inspection hole
FR	Holes rotated through 45° in relation to standard position
DP	Double set of hole
AN	Black anodized finish
SA	Clearance holes at motor interface
Pxx	Customer specification

Note:
- Bell-housings with DI options are supplied complete with threaded closure plug.
- For customization features other than those indicated on this page, contact MP Filtri Technical and Sales Department.

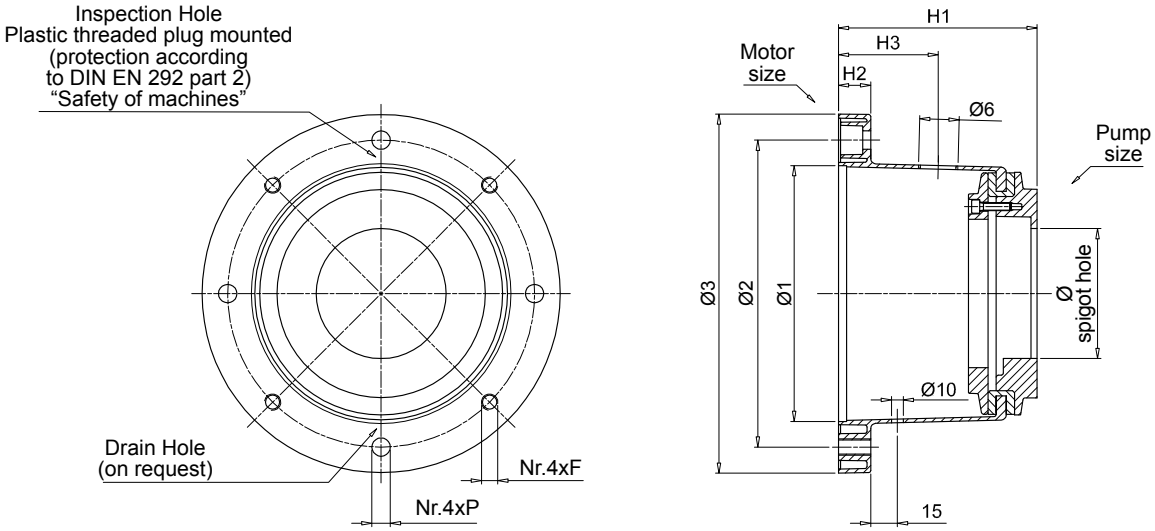

IEC - Electric motors Motor size	Shaft end [Ø x L]	Bell-housing code	Dimensions [mm] Ø1	Ø2	Ø3	H1	H2	F	P	On request H3	Ø6	Ø spigot hole Minimum [mm]	Weight [kg]
100 - 112	28x60	**LMS250AFSA*****	180	215	250	128	19	M12	14	75	3/4"	50	3.72
		LMS250AFSB***	180	215	250	148	19	M12	14	75	3/4"	50	4.10
132	38x80	**LMS300AFSC*****	230	265	300	155	23	M12	14	80	3/4"	50	4.20
		LMS300AFSD***	230	265	300	168	23	M12	14	80	3/4"	80	4.45
		LMS300AFSE***	230	265	300	194	23	M12	14	80	3/4"	80	6.51
160	42x110	**LMS350AFSF*****	250	300	350	204	31	M16	18	95	1"	80	6.80
		LMS350AFSG***	250	300	350	228	31	M16	18	95	1"	80	7.10
180	48x110	**LMS350AFSH*****	250	300	350	204	31	M16	18	95	1"	80	8.51
200	55x110	**LMS400AFSL*****	300	350	400	228	31	M16	18	125	1 1/2"	80	8.80
		LMS400AFSM***	300	350	400	256	31	M16	18	125	1 1/2"	80	9.10
		LMS400AFSN***	300	350	400	240	31	M16	18	125	1 1/2"	80	11.61

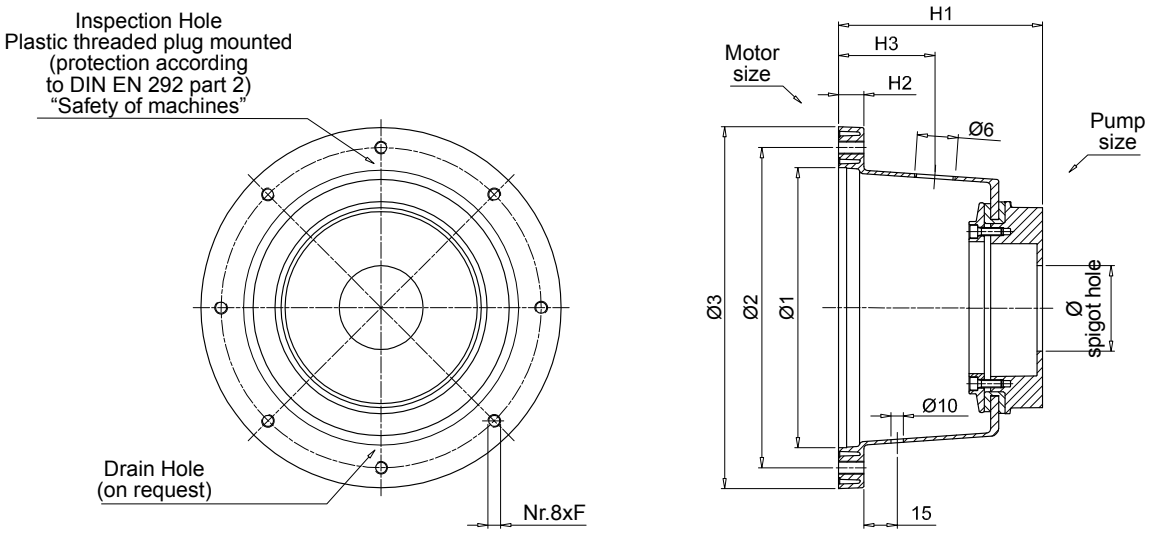

IEC - Electric motors Motor size	Shaft end [Ø x L]	Bell-housing code	Dimensions [mm] Ø1	Ø2	Ø3	H1	H2	F	P	On request H3	Ø6	Ø spigot hole Minimum [mm]	Weight [kg]
225	60x140	**LMS450AFSO*****	350	400	450	255	31	M16	-	175	1 1/2"	80	12.1
250	65x140	**LMS550AFSP*****	450	500	550	255	31	M16	-	176	1 1/2"	80	15.2
280	75x140	**LMS550AFSR*****	450	500	550	270	31	M16	-	177	1 1/2"	80	15.9
315	80x170	**LMS660AFST*****	550	600	660	305	42	M20	-	179	1 1/2"	80	20.2

Dimensions

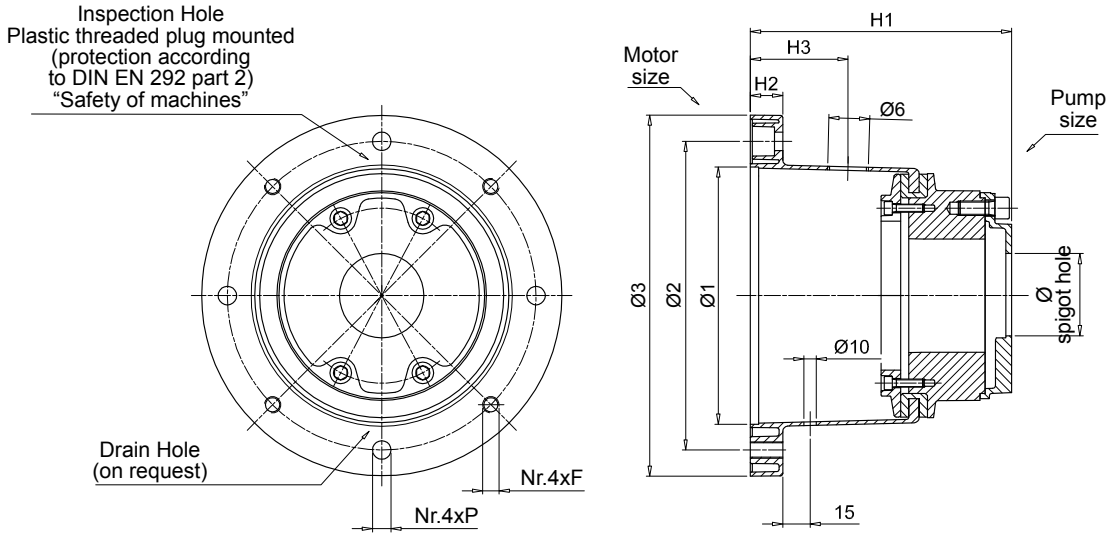

IEC - Electric motors		Bell-housing	Dimensions [mm]							On request		Ø spigot hole	Weight
Motor size	Shaft end [Ø x L]	code	Ø1	Ø2	Ø3	H1	H2	F	P	H3	Ø6	Minimum [mm]	[kg]
100 - 112	28x60	**LDS250AFRA*****	180	215	250	158	19	M12	14	75	3/4"	50	3.97
		LDS250AFRB***	180	215	250	165	19	M12	14	75	3/4"	50	4.10
		LDS250AFRE***	180	215	250	173	19	M12	14	75	3/4"	50	4.70
132	38x80	**LDS300AFRB*****	230	265	300	185	23	M12	14	80	3/4"	50	4.75
		LDS300AFRC***	230	265	300	188	23	M12	14	80	3/4"	80	4.85
		LDS300AF5G***	230	265	300	232	23	M12	14	80	3/4"	80	6.70
160 180	42x110 48x110	**LDS350AF5A*****	250	300	350	254	31	M16	18	95	1"	80	8.10
200	55x110	**LDS400AF6A*****	300	350	400	288	31	M16	18	125	1 1/2"	80	10.00

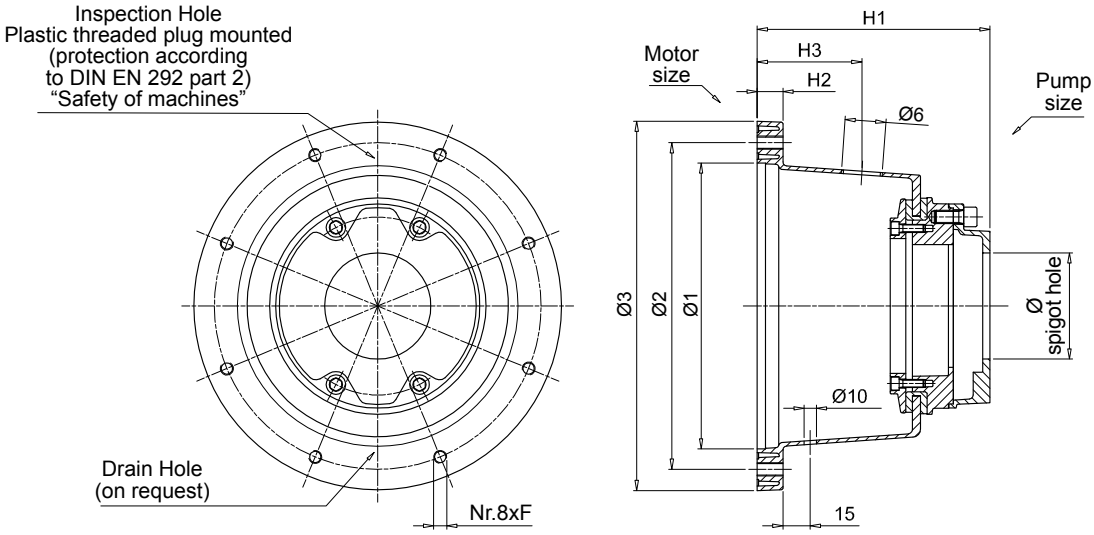

IEC - Electric motors Motor size	Shaft end [Ø x L]	Bell-housing code	Dimensions Ø1	Ø2	Ø3	H1	H2	F	P	On request H3	Ø6	Ø spigot hole Minimum [mm]	Weight [kg]
225	60x140	**LDS450AF6A*****	350	400	450	287	31	M16	-	175	1 1/2"	80	14.10
250 280	65x140 75x140	**LDS550AF6A*****	450	500	550	300	31	M16	-	176	1 1/2"	80	17.20
315	80x170	**LDS660AF6A*****	550	600	660	335	42	M20	-	179	1 1/2"	80	23.00

Comparative table

MP Filtri code	KTR code	OMT code	Raja code
LMS250A***	PK+D150/190	BS251***	R250***DF
LMS300A***	PK+D150/190	BS300***	R300***DF
LMS350A***	PK+D150/D190/D230/260	BS350***	R350***DF
LMS400A***	PK+/D190/D230/260	BS400***	R400***DF
LMS450A***	PK+/D190/D230/260D/D330	BS451***	R450***DF
LMS550A***	PK+/D190/D230/260D/D330	BS551***	R550***DF
LMS660A***	PK+/D190/D230/260D/D330	BS661***	R660***DF

Note:
The above table is guideline only.
Not all bell-housings are fully interchangeable.

MULTI-COMPONENTS

IEC electric motor range from size 132 up to size 355

Technical data

Modular Bell-Housing Components - IEC electric motor range from size 132 up to size 355

Materials
- Base module: Pressure die-cast aluminium alloy
- Pump flange: Aluminium alloy
- Intermediate adapter: Aluminium alloy.
- Screw kit: Steel
- Gaskets: Special paper (Guarnital)

Compatibility with fluids
Modular bell-housing components compatible for use with:
- Mineral oils types HH-HL-HM-HR-HV, to ISO 6743/4 standard
- Water based emulsions types HFAE-HFAS, to ISO 6743/4 standard
- Water glycol type HFC, to ISO 6743/4 standard: ask for anodized version

Special Applications
Any applications not covered by the normal indications contained in this catalogue must be evaluated and approved by MP Filtri Technical and Sales Department

Temperature
From -30 °C to +80 °C

Note
For temperatures outside this range, contact MP Filtri Technical and Sales Department

BMC

Bell-Housing size	Flange ISO 3019-2 50 B2-B4	63 B2-B4	80 B2-B4	100 B2-B4	125 B2-B4	160 B2-B4	200 B2-B4	IEC Motors size
BMC200	●	●	●	●				**IEC 80 Ø200 - Ø19x40**
BMC200	●	●	●	●				**IEC 90 Ø200 - Ø24x50**
BMC250	●	●	●	●	●			**IEC 100 Ø250 - Ø28x60**
BMC250	●	●	●	●	●			**IEC 112 Ø250 - Ø28x60**
BMC300			●	●	●	●		**IEC 132 Ø300 - Ø38x80**
BMC350			●	●	●	●		**IEC 160 Ø350 - Ø42x110**
BMC350			●	●	●	●	●	**IEC 180 Ø350 - Ø48x110**
BMC400			●	●	●	●	●	**IEC 200 Ø400 - Ø55x110**
BMC450			●	●	●	●	●	**IEC 225 Ø450 - Ø60x140**

Bell-Housing size	Flange SAE J 744 50-2 (A-A)	82-2 (A)	101-2 (B)	127-2 (C)	152-2 (D)	165-2 (E)	101-4 (B)	127-4 (D)	152-4 (D)	165-4 (E)	IEC Motors size
BMC200	●	●									**IEC 80 Ø200 - Ø19x40**
BMC200	●	●									**IEC 90 Ø200 - Ø24x50**
BMC250	●	●	●				●				**IEC 100 Ø250 - Ø28x60**
BMC250	●	●	●	●			●				**IEC 112 Ø250 - Ø28x60**
BMC300		●	●	●			●	●			**IEC 132 Ø300 - Ø38x80**
BMC350		●	●	●			●	●			**IEC 160 Ø350 - Ø42x110**
BMC350		●	●	●	●		●	●	●		**IEC 180 Ø350 - Ø48x110**
BMC400		●	●	●	●	●	●	●	●	●	**IEC 200 Ø400 - Ø55x110**
BMC450			●	●	●	●		●	●	●	**IEC 225 Ø450 - Ø60x140**

BMT

Bell-Housing size	Flange ISO 3019-2 50 B2-B4	63 B2-B4	80 B2-B4	100 B2-B4	125 B2-B4	160 B2-B4	200 B2-B4	IEC Motors size
BMT300			●	●	●	●		**IEC 132 Ø300 - Ø38x80**
BMT350			●	●	●	●		**IEC 160 Ø350 - Ø42x110**
BMT350			●	●	●	●	●	**IEC 180 Ø350 - Ø48x110**
BMT400			●	●	●	●	●	**IEC 200 Ø400 - Ø55x110**
BMT450			●	●	●	●	●	**IEC 225 Ø450 - Ø60x140**
BMT550					●	●	●	**IEC 250 Ø550 - Ø65x140**
BMT550					●	●	●	**IEC 280 Ø550 - Ø75x140**
BMT660					●	●	●	**IEC 315 Ø660 - Ø80x170**
BAD800					●	●	●	**IEC 355 Ø800 - Ø95x210**

Bell-Housing size	Flange SAE J 744 50-2 (A-A)	82-2 (A)	101-2 (B)	127-2 (C)	152-2 (D)	165-2 (E)	101-4 (B)	127-4 (D)	152-4 (D)	165-4 (E)	IEC Motors size
BMT300		●	●	●			●	●			**IEC 132 Ø300 - Ø38x80**
BMT350		●	●	●			●	●			**IEC 160 Ø350 - Ø42x110**
BMT350		●	●	●	●		●	●	●		**IEC 180 Ø350 - Ø48x110**
BMT400		●	●	●	●	●	●	●	●	●	**IEC 200 Ø400 - Ø55x110**
BMT450			●	●	●	●		●	●	●	**IEC 225 Ø450 - Ø60x140**
BMT550				●	●	●		●	●	●	**IEC 250 Ø550 - Ø65x140**
BMT550				●	●	●		●	●	●	**IEC 280 Ø550 - Ø75x140**
BMT660				●	●	●		●	●	●	**IEC 315 Ø660 - Ø80x170**
BAD800				●	●	●		●	●	●	**IEC 355 Ø800 - Ø95x210**

Designation & Ordering code

BMC

1 Motor base series and size

BMC200A1001	BMC300A1551	BMC400A2016
BMC200A1251	BMC300A1555	BMC450A2507
BMC250A1141	BMC300A1705	
BMC250A1361	BMC350A1945	
	BMC350A1946	

BMT300A0805	BMT550A21567
BMT350A1105	BMT660A25067
BMT400A1106	BAD800A2707
BMT450A1406	

Options

DI	Drain hole + inspection hole
AN	Black anodized finish
SA	Clearance holes at motor interface
Pxx	Customer specification

Configuration example: BMC200A1001 | DI

2 Intermediate adapter series and size

AD60465
AD50385
AD60466
AD50386
AD50467
AD60467

Options

AN	Black anodized finish
Pxx	Customer specification

Configuration example: AD60465 | AN

3 Pump flange series and size

FR1023	FP5026	FP6032	FP7052
FR1025	FP5032	FP6045	FP7066
FR1033	FP5035	FP6058	FP7069
FR1035	FP5045	FP6070	FP7086
FR1040	FP5056	FP6082	FP70111
FR1079	FP5063	FP6086	
	FP5091	FP60101	
		FP60110	

Pump interface codes

070	See page 56

Options

FR	Holes rotated through 45° in relation to standard position
DP	Double set of hole
AN	Black anodized finish
Pxx	Customer specification

Configuration example: FP5026 | 070 | AN

Options

Mounting kit code series and size

KVG1	See page 107
KVG5	
KVG6	
KVG7	

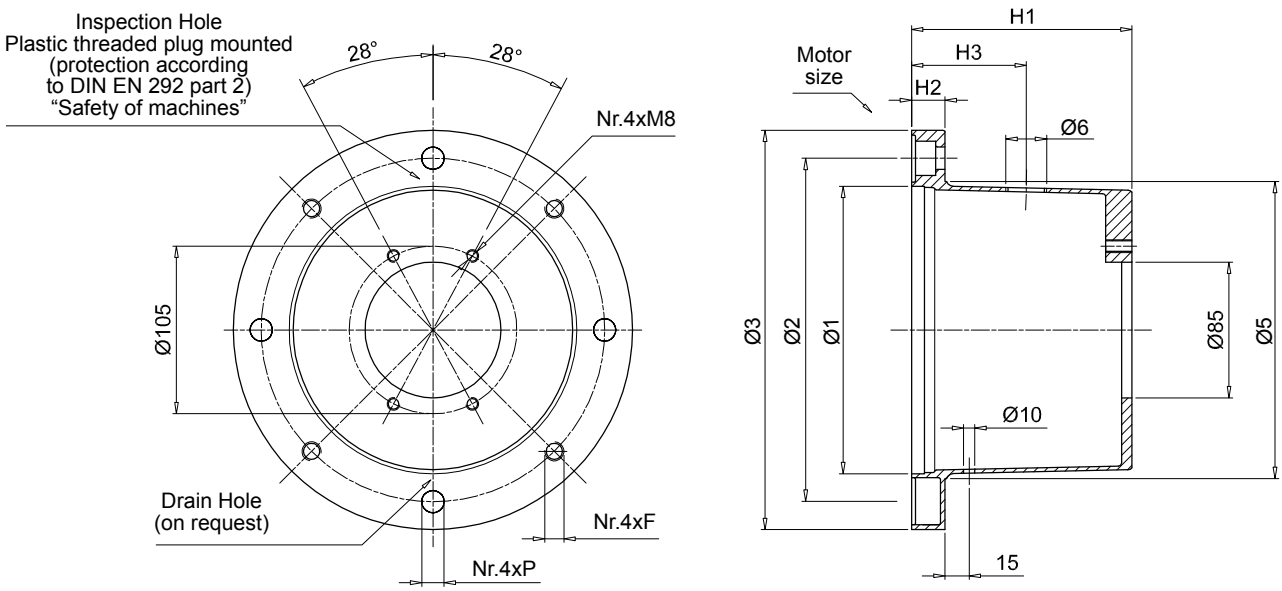

1

IEC - Electric motors		Motor base	Dimensions [mm]								On request		Weight
Motor size	Shaft end [Ø x L]	code	Ø1	Ø2	Ø3	Ø5	H1	H2	F	P	H3	Ø6	[kg]
80	19x40	**BMC200A1001**	130	165	200	135	100	18	M10	11	60	3/4"	0.75
90	24x50	**BMC200A1251**	130	165	200	135	125	18	M10	11	75	3/4"	0.95
100-112	28x60	**BMC250A1141**	180	215	250	186	114	19	M12	14	80	3/4"	1.60
		BMC250A1361	180	215	250	186	138	19	M12	14	100	3/4"	1.60
132	38x80	**BMC300A1551**	230	265	300	235	155	23	M12	14	95	3/4"	3.30

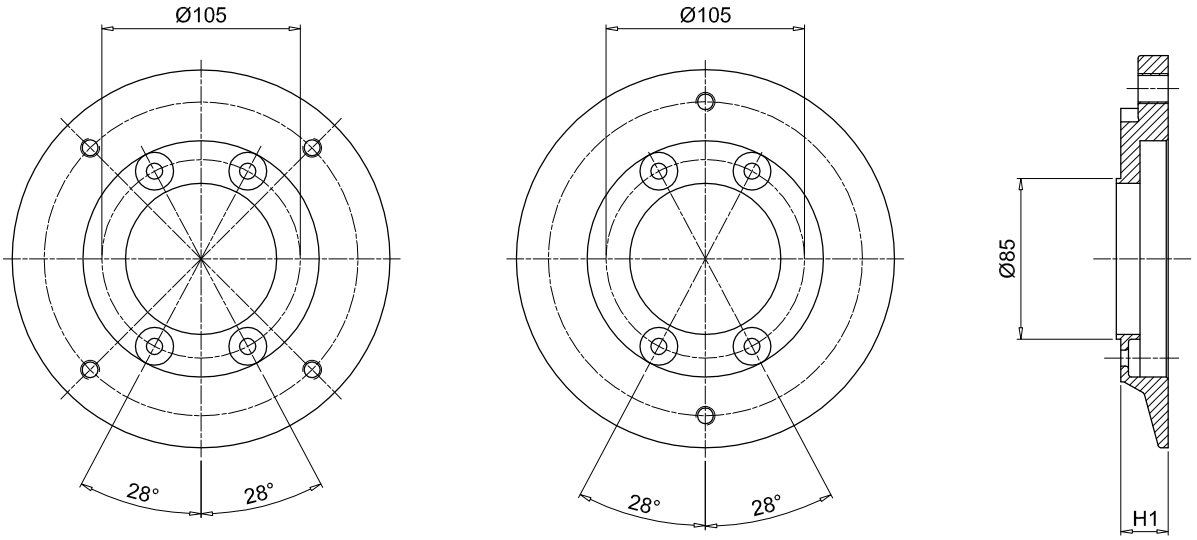

4 Bolt Version

2 Bolt Version

3

Pump flange code	H1	Mounting kit	Available pump interface 2 Bolt	4 Bolt	Weight [kg]
FR1023***	23	KVG1 See page 107	D042 - S061 - S063 -S083 - S023 - S070 -S071 - S082 - S075	S024 - S025 - S125 - S154	0.25
FR1025***	25		S080 - S082	S021 - S026 - S068 -S069	0.30
FR1033***	33		S023 - S070 - S071 - S072 -S074 S080 -S082	S021 - S026 - S027	0.80
FR1035***	35		S060 - S063 -S065	-	0.90
FR1040***	40		-	S098 - S227	1.10
FR1079***	79		-	S031	1.30

Pump flange code to be complete with available pump interface
Example: **FR1023S024**

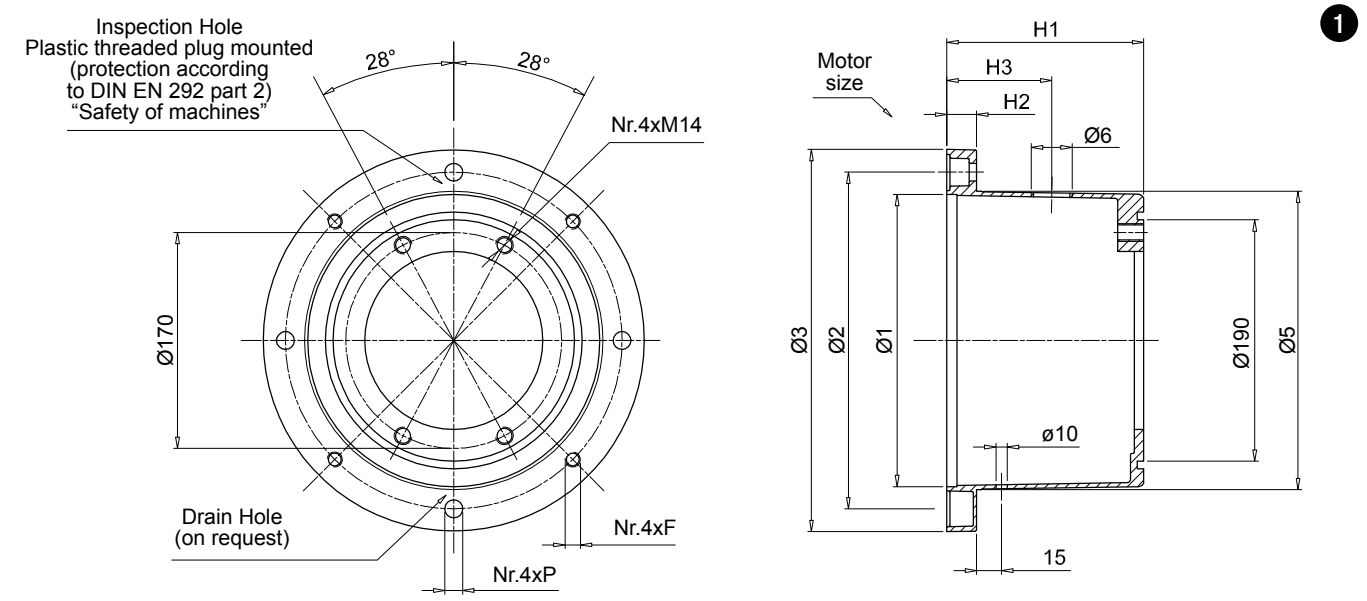

IEC - Electric motors		Motor base	Dimensions [mm]								On request		Weight
Motor size	Shaft end [Ø x L]	code	Ø1	Ø2	Ø3	Ø5	H1	H2	F	P	H3	Ø6	[kg]
132	38x80	**BMC300A1555**	230	265	300	235	155	23	M12	14	95	3/4"	3.3
		BMC300A1705	230	265	300	235	170	23	M12	14	110	3/4"	3.6
160	42x110	**BMC350A1785**	250	300	350	254	178	31	M16	18	100	1"	4.4
180	48x110	**BMC350A1945**	250	300	350	254	194	31	M16	18	115	1"	4.9

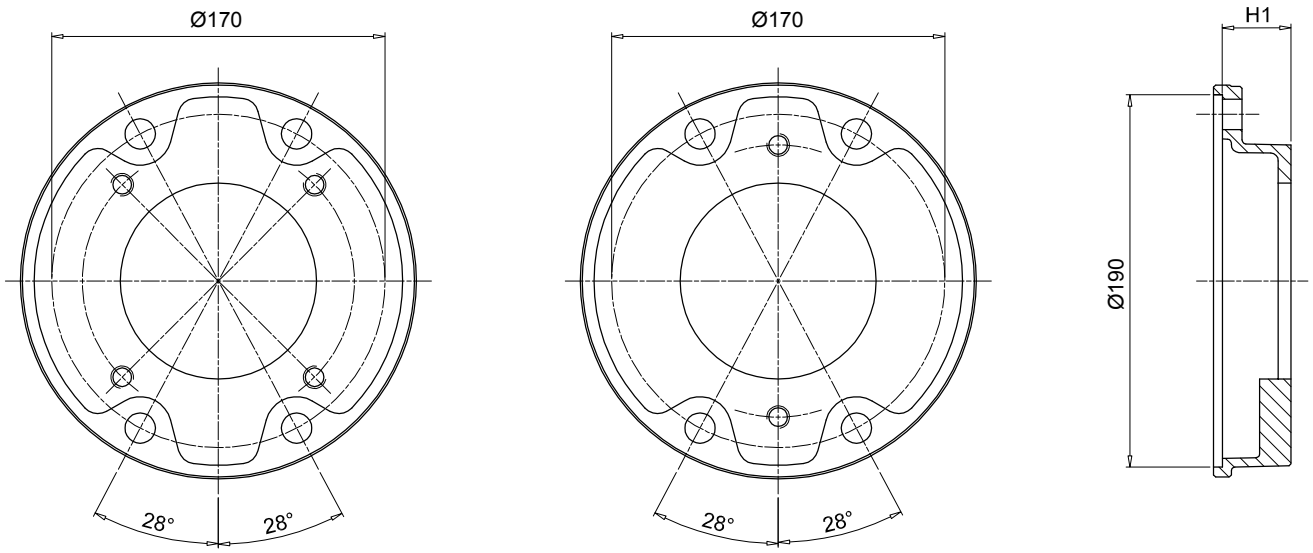

Pump flange code	H1	Mounting kit	Available pump interface 2 Bolt	Available pump interface 4 Bolt	Weight [kg]
FP5026***	26	KVG5 See page 107	S023 - D042 - S063 - S070 - S072 S075	S024 - S024 -S033 - S125 - S154	1.0
FP5032***	32		-	S024 - S031 - S096 - S125	1.1
FP5035***	35		S023 - D042 - S063 - S070 - S072 - S075 - S060 - S072 - S074 - S075 - S106	S021 - S024 - S025 - S026 - S031 - S059 - S068 - S083 - S097 - S125 - S141	0.9
FP5045***	45		S060 - S070 - S071 - S072 - S074 - S075 - S106	S021 - S024 - S025 - S026 - S068 - S125 -S141	0.9
FP5056***	56		S072	S021 - S026	1.6
FP5063***	63		S070 - S079 - S138	S021 - S025 - S068 -S141	1.7
FP5091***	91		-	S025 - S031 - S033 - S113 - S267	2.2

Pump flange code to be complete with available pump interface
Example: **FP5026S023**

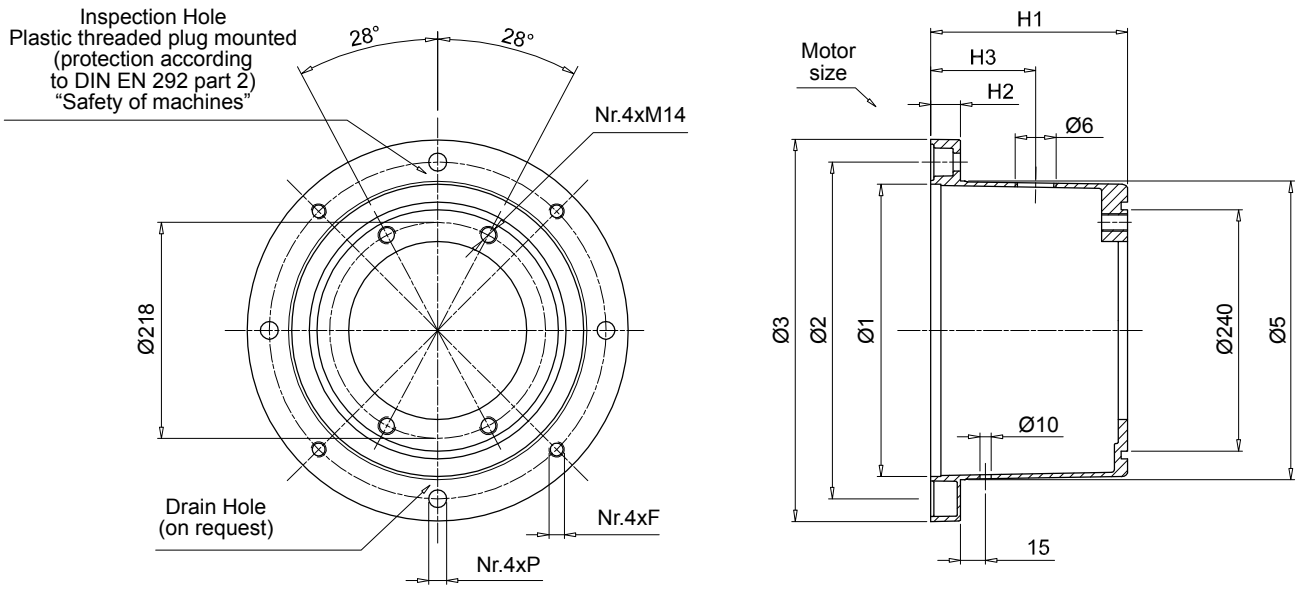

1

IEC - Electric motors Motor size	Shaft end [Ø x L]	Motor base code	Dimensions [mm] Ø1	Ø2	Ø3	Ø5	H1	H2	F	P	On request H3	Ø6	Weight [kg]
160	42x110	**BMC350A1786**	250	300	350	254	178	31	M16	18	100	1"	4.4
180	48x110	**BMC350A1946**	250	300	350	254	194	31	M16	18	115	1"	1.9
200	55x110	**BMC400A2016**	300	350	400	305	201	31	M16	18	125	1 1/2"	6.9

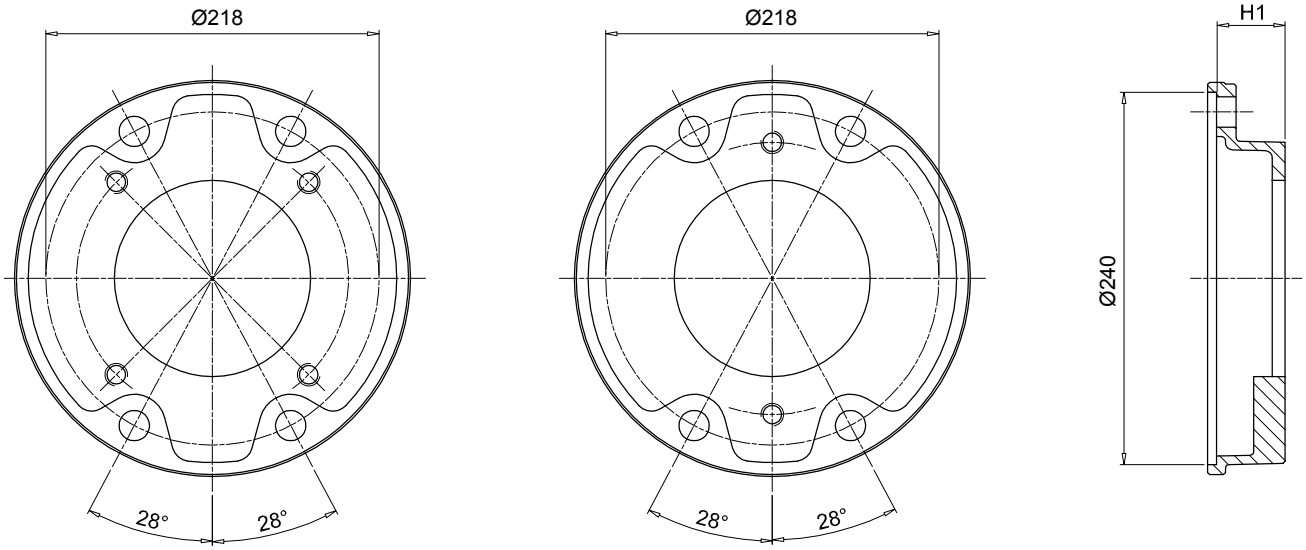

4 Bolt Version

2 Bolt Version

3

Pump flange code	H1	Mounting kit	Available pump interface 2 Bolt	4 Bolt	Weight [kg]
FP6032***	32	KVG6 See page 107	S081 - S082	S021 - S035	1.8
FP6045***	45		S070 - S075 - S080 - S081 - S082	S021 -S025 - S026 -S027 - S069 - S077 -S125 - S198 - S207 - S215 - S253	2.1
FP6058***	58		S079 - S080 - S081 - S082	S025 - S026 -S027 - S038 - S077 - S078 - S207 - S215 - S237	2.4
FP6070***	70		S080	-	3.0
FP6082***	82		S080 - S081	S038 - S141 - 198 - 215	3.3
FP6086***	86		S090 - S092 - S166 - S091	S021 - S026 - S027 - S077 - S078 - S114 - S132 - 198 - S200	3.4
FP6101***	101		-	S027 - S035 - S113 -S132 - S148 - S176 - S228	4.2
FP6110***	110		S080	S111	5.5

Pump flange code to be complete with available pump interface
Example: **FP6032S021**

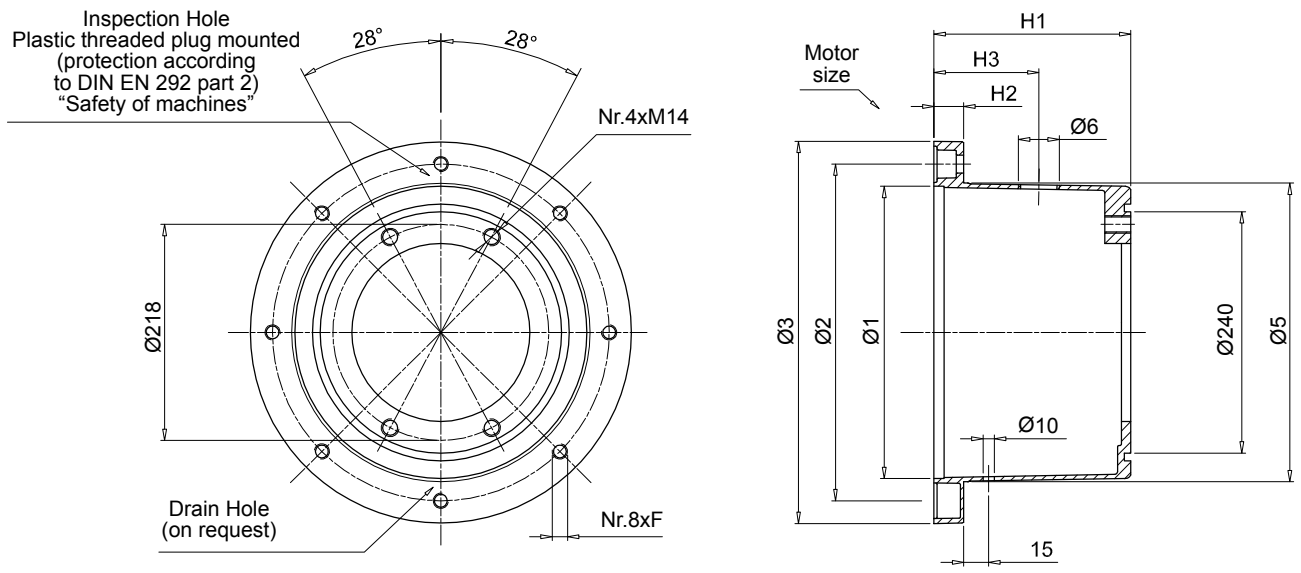

1

IEC - Electric motors Motor size	Shaft end [Ø x L]	Motor base code	Dimensions [mm] Ø1	Ø2	Ø3	Ø5	H1	H2	F	P	On request H3	Ø6	Weight [kg]
225	60x140	**BMC450A2506**	350	400	450	350	250	31	M16	-	175	1 1/2"	6.9

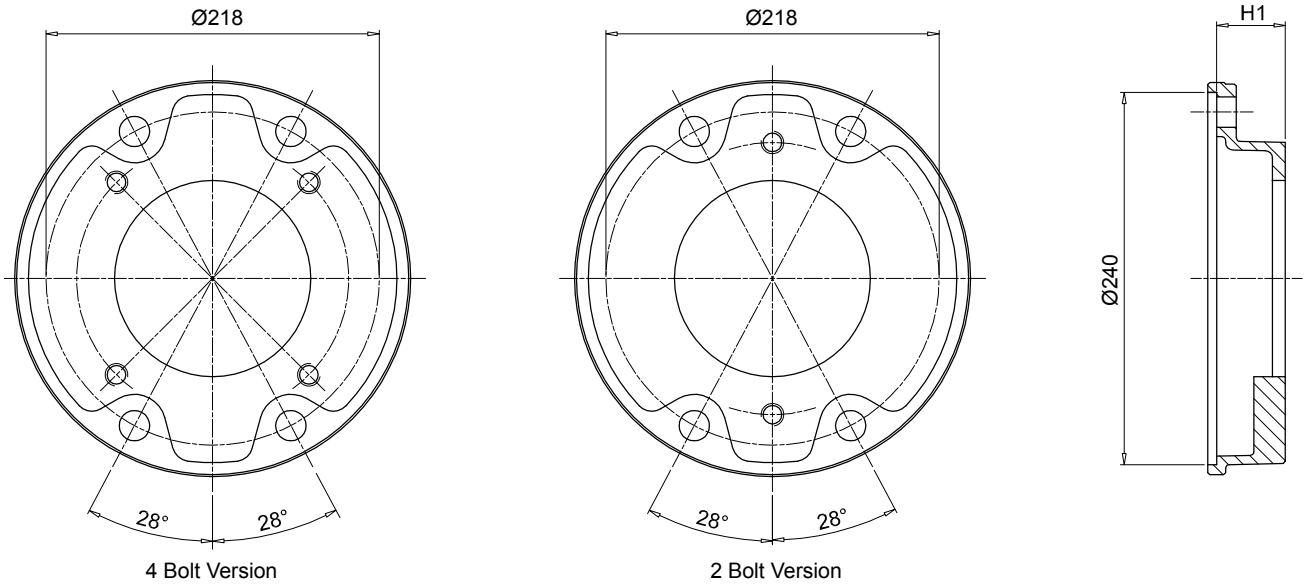

3

Pump flange code	H1	Mounting kit	Available pump interface 2 Bolt	4 Bolt	Weight [kg]
FP6032***	32	KVG6 See page 107	S081 - S082	S021 - S035	1.8
FP6045***	45		S070 - S075 - S080 - S081 - S082	S021 -S025 - S026 -S027 - S069 - S077 -S125 - S198 - S207 - S215 - S253	2.1
FP6058***	58		S079 - S080 - S081 - S082	S025 - S026 -S027 - S038 - S077 - S078 - S207 - S215 - S237	2.4
FP6070***	70		S080	-	3.0
FP6082***	82		S080 - S081	S038 - S141 - 198 - 215	3.3
FP6086***	86		S090 - S092 - S166 - S091	S021 - S026 - S027 - S077 - S078 - S114 - S132 - 198 - S200	3.4
FP6101***	101		-	S027 - S035 - S113 -S132 - S148 - S176 - S228	4.2
FP6110***	110		S080	S111	5.5

Pump flange code to be complete with available pump interface
Example: **FP6032S021**

1

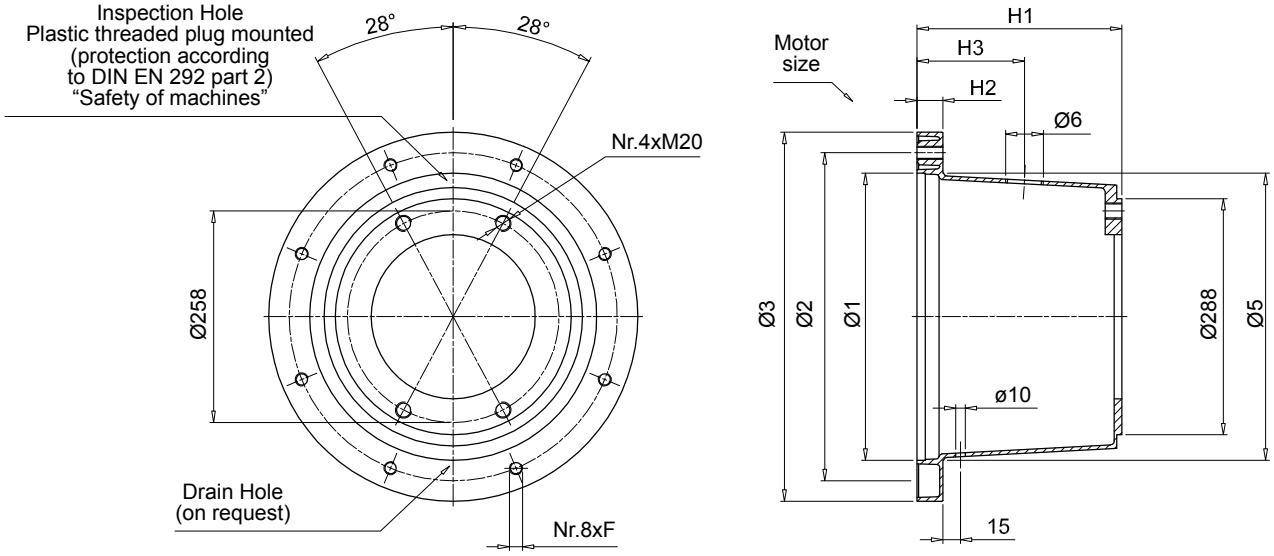

IEC - Electric motors Motor size	Shaft end [Ø x L]	Motor base code	Dimensions [mm] Ø1	Ø2	Ø3	Ø5	H1	H2	F	P	On request H3	Ø6	Weight [kg]
225	60x140	**BMC450A2507**	350	400	450	350	250	31	M16	-	175	1 1/2"	6.9

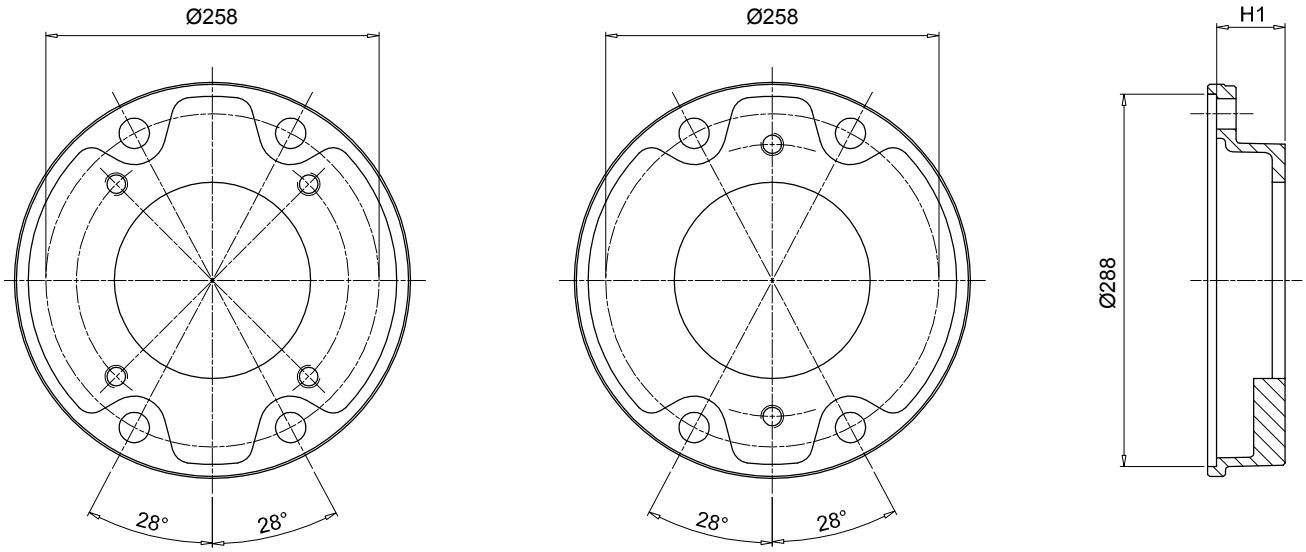

3

Pump flange code	H1	Mounting kit	Available pump interface 2 Bolt	4 Bolt	Weight [kg]
FP7052***	52	KVG7 See page 107	-	S028 - S108 - S112 - S133 - S192	4.4
FP7066***	66		S090 - S092 - S166	-	4.8
FP7069***	69		-	S108 - S143 - S148 - S192 - S201 - S204 - S281 -S282	4.9
FP7086***	86		S091 - S092 - S117 - S166	S022 - S027 - S028 - S108 - S112 - S184 - S192 - S201 - S228 - S300	5.2
FP7111***	111		S091 - S092 - S117 - S145	S028 - S108 - S112 - S133 - S184	6.3

Pump flange code to be complete with available pump interface
Example: **FP7052S028**

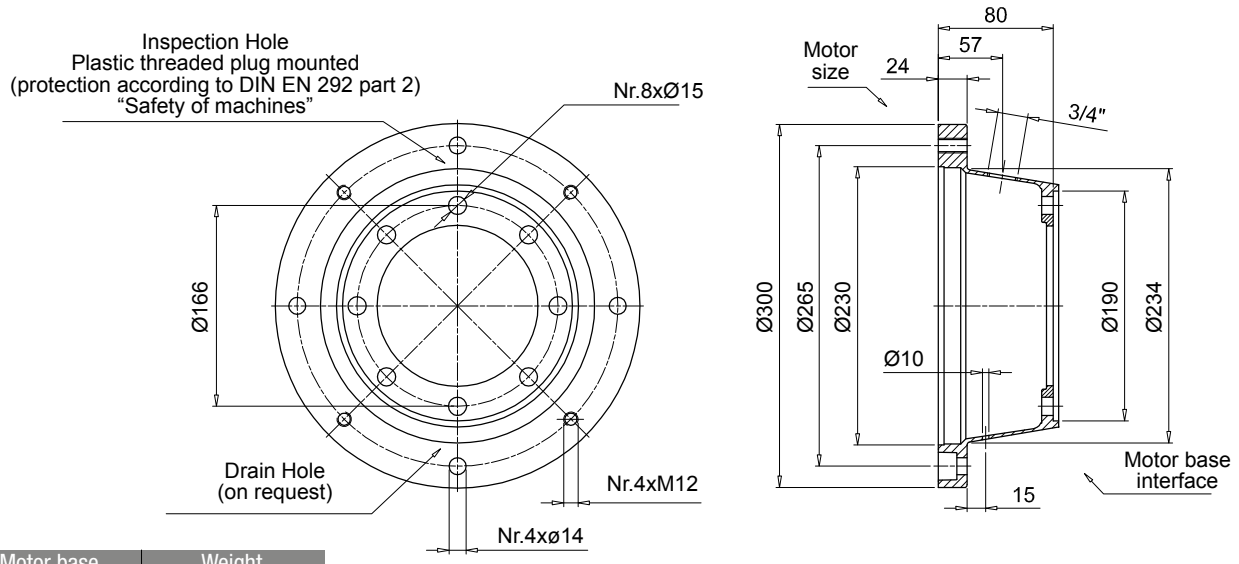

Motor base code	Weight [kg]
BMT300A0805	1.95

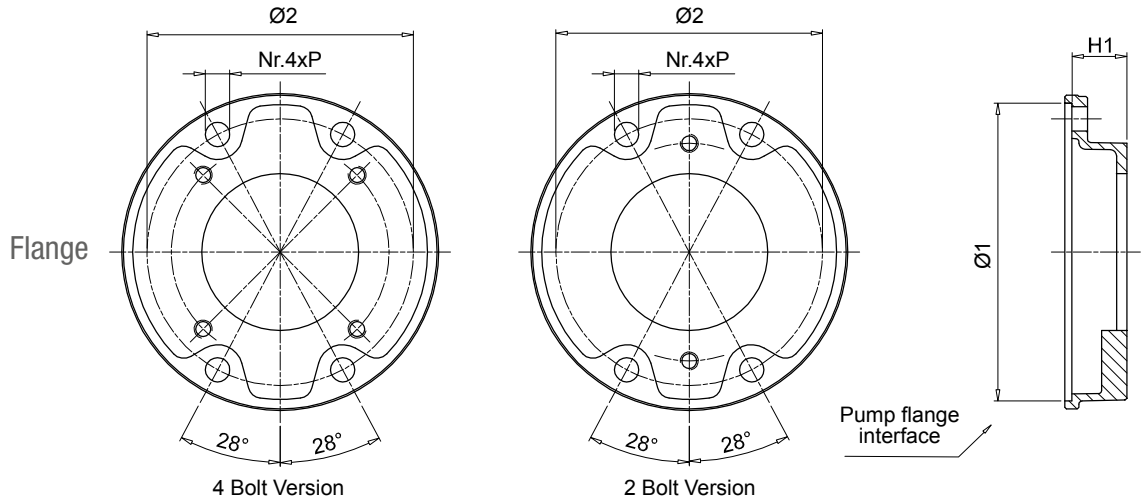

Pump flange code	H1	Ø1	Ø2	P	Mounting kit	Available pump interface 2 Bolt	Available pump interface 4 Bolt	Weight [kg]
FP5026***	26	190	170	15	KVG5 See page 107	S023 - D042 - S063 - S070 - S072 S075	S024 - S024 -S033 - S125 - S154	1
FP5032***	32					-	S024 - S031 - S096 - S125	1.1
FP5035***	35					S023 - D042 - S063 - S070 - S072 - S075 - S060 - S072 - S074 - S075 - S106	S021 - S024 - S025 - S026 - S031 - S059 - S068 - S083 - S097 - S125 - S141	0.9
FP5045***	45					S060 - S070 - S071 - S072 - S074 - S075 - S106	S021 - S024 - S025 - S026 - S068 - S125 -S141	0.9
FP5056***	56					S072	S021 - S026	1.6
FP5063***	63					S070 - S079 - S138	S021 - S025 - S068 -S141	1.7
FP5091***	91					-	S025 - S031 - S033 - S113 - S267	2.2
FP6032***	32	240	218	17	KVG6 See page 107	S081 - S082	S021 - S035	1.8
FP6045***	45					S070 - S075 - S080 - S081 - S082	S021 -S025 - S026 -S027 - S069 - S077 -S125 - S198 - S207 - S215 - S253	2.1
FP6058***	58					S079 - S080 - S081 - S082	S025 - S026 -S027 - S038 - S077 - S078 - S207 - S215 - S237	2.4
FP6070***	70					S080	-	3.0
FP6082***	82					S080 - S081	S038 - S141 - 198 - 215	3.3
FP6086***	86					S090 - S092 - S166 - S091	S021 - S026 - S027 - S077 - S078 - S114 - S132 - 198 - S200	3.4
FP6101***	101					-	S027 - S035 - S113 -S132 - S148 - S176 - S228	4.2
FP6110***	110					S080	S111	5.5
FP7052***	52	288	258	22	KVG7 See page 107	-	S028 - S108 - S112 - S133 - S192	4.4
FP7066***	66					S090 - S092 - S166	-	4.8
FP7069***	69					-	S108 - S143 - S148 - S192 - S201 - S204 - S281 -S282	4.9
FP7086***	86					S091 - S092 - S117 - S166	S022 - S027 - S028 - S108 - S112 - S184 - S192 - S201 - S228 - S300	5.2
FP7111***	111					S091 - S092 - S117 - S145	S028 - S108 - S112 - S133 - S184	6.3

Pump flange code to be complete with available pump interface

Example: **FP6032S021**

2

Flange interface

Motor base interface

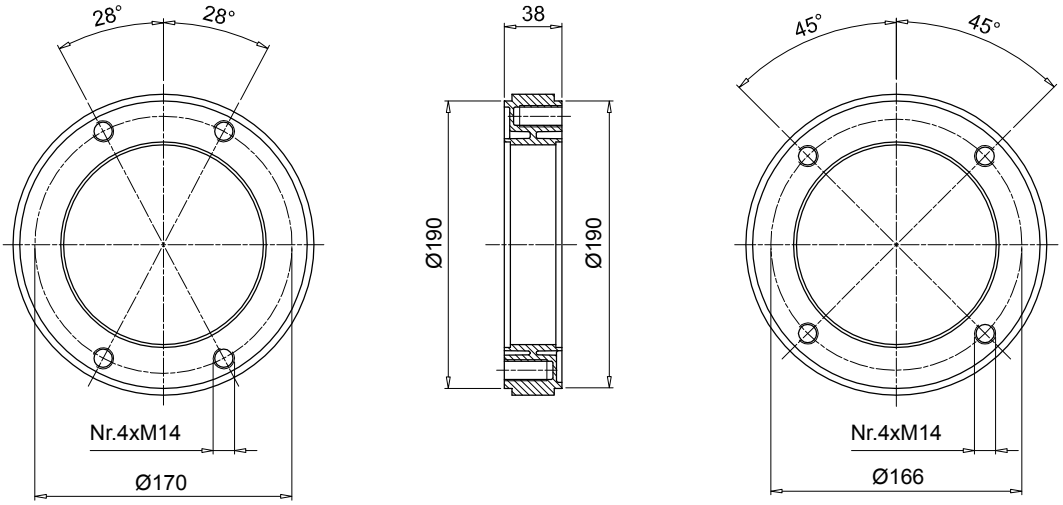

Code	Weight [kg]
AD50385	1.00

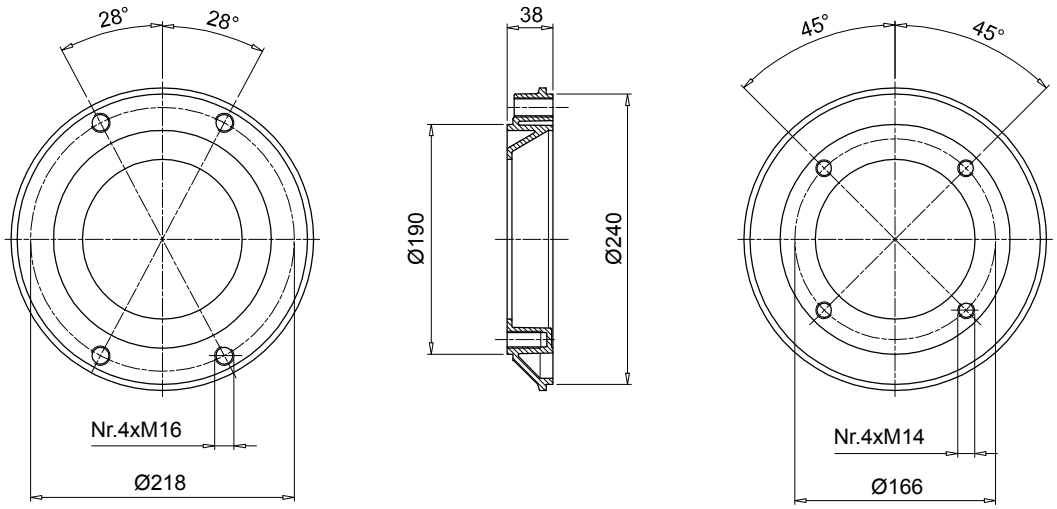

Code	Weight [kg]
AD50386	1.25

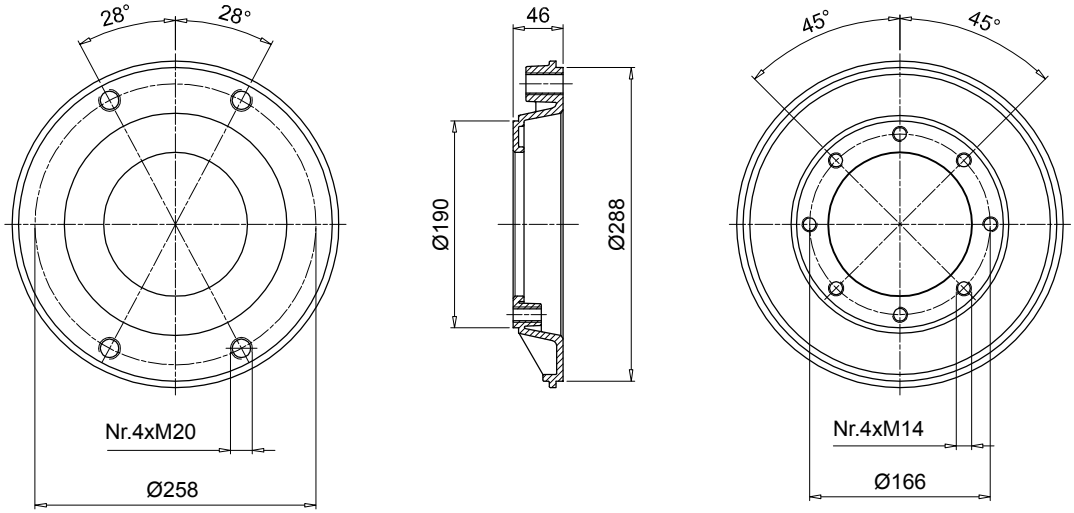

Code	Weight [kg]
AD50467	1.90

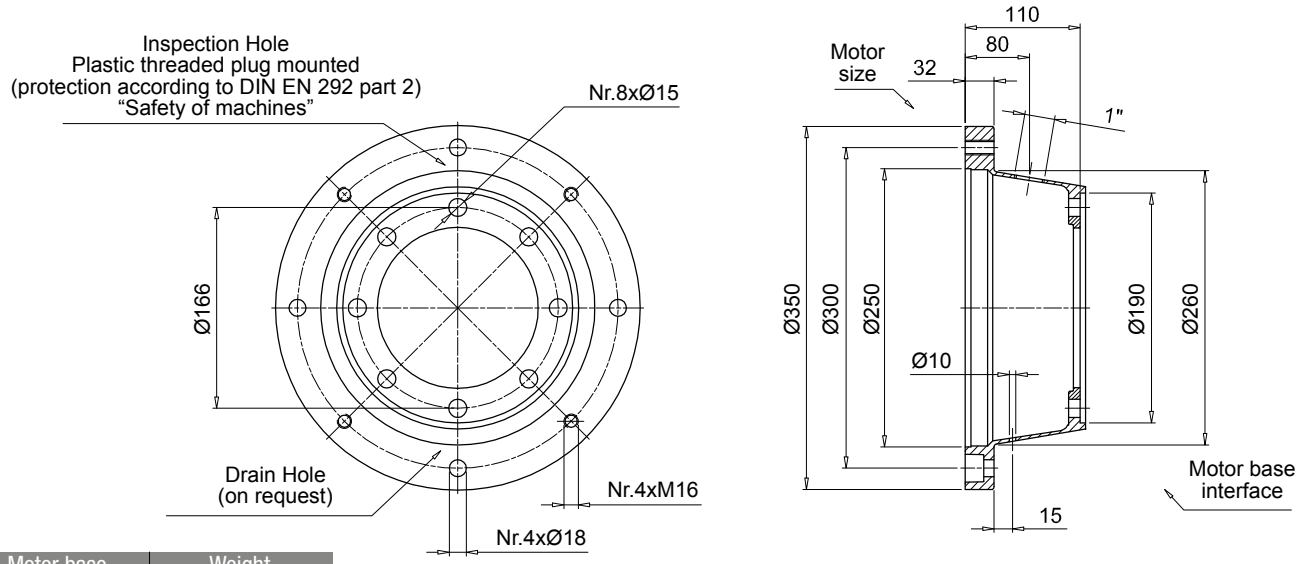

Motor base code	Weight [kg]
BMT350A1105	3.10

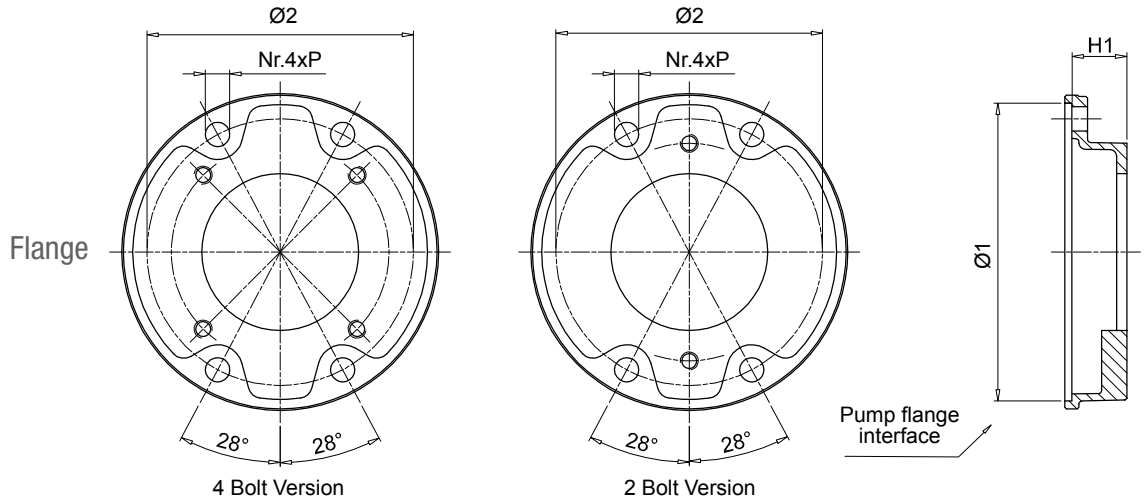

Pump flange code	H1	Ø1	Ø2	P	Mounting kit	Available pump interface 2 Bolt	Available pump interface 4 Bolt	Weight [kg]
FP5026***	26	190	170	15	KVG5 See page 107	S023 - D042 - S063 - S070 - S072 S075	S024 - S024 -S033 - S125 - S154	1
FP5032***	32					-	S024 - S031 - S096 - S125	1.1
FP5035***	35					S023 - D042 - S063 - S070 - S072 - S075 - S060 - S072 - S074 - S075 - S106	S021 - S024 - S025 - S026 - S031 - S059 - S068 - S083 - S097 - S125 - S141	0.9
FP5045***	45					S060 - S070 - S071 - S072 - S074 - S075 - S106	S021 - S024 - S025 - S026 - S068 - S125 -S141	0.9
FP5056***	56					S072	S021 - S026	1.6
FP5063***	63					S070 - S079 - S138	S021 - S025 - S068 -S141	1.7
FP5091***	91					-	S025 - S031 - S033 - S113 - S267	2.2
FP6032***	32	240	218	17	KVG6 See page 107	S081 - S082	S021 - S035	1.8
FP6045***	45					S070 - S075 - S080 - S081 - S082	S021 -S025 - S026 -S027 - S069 - S077 -S125 - S198 - S207 - S215 - S253	2.1
FP6058***	58					S079 - S080 - S081 - S082	S025 - S026 -S027 - S038 - S077 - S078 - S207 - S215 - S237	2.4
FP6070***	70					S080	-	3.0
FP6082***	82					S080 - S081	S038 - S141 - 198 - 215	3.3
FP6086***	86					S090 - S092 - S166 - S091	S021 - S026 - S027 - S077 - S078 - S114 - S132 - 198 - S200	3.4
FP6101***	101					-	S027 - S035 - S113 -S132 - S148 - S176 - S228	4.2
FP6110***	110					S080	S111	5.5
FP7052***	52	288	258	22	KVG7 See page 107	-	S028 - S108 - S112 - S133 - S192	4.4
FP7066***	66					S090 - S092 - S166	-	4.8
FP7069***	69					-	S108 - S143 - S148 - S192 - S201 - S204 - S281 -S282	4.9
FP7086***	86					S091 - S092 - S117 - S166	S022 - S027 - S028 - S108 - S112 - S184 - S192 - S201 - S228 - S300	5.2
FP7111***	111					S091 - S092 - S117 - S145	S028 - S108 - S112 - S133 - S184	6.3

Pump flange code to be complete with available pump interface
Example: **FP6032S021**

2

Flange interface

Motor base interface

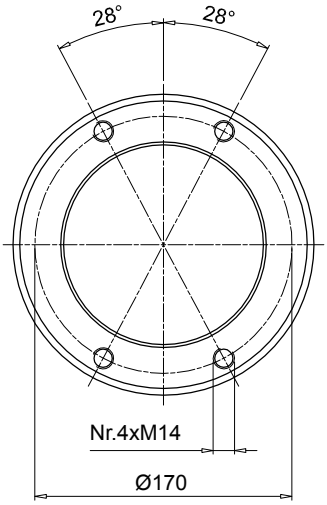

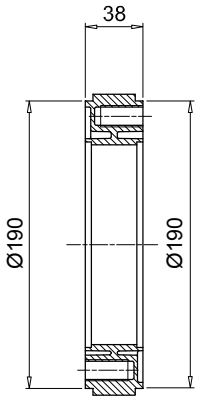

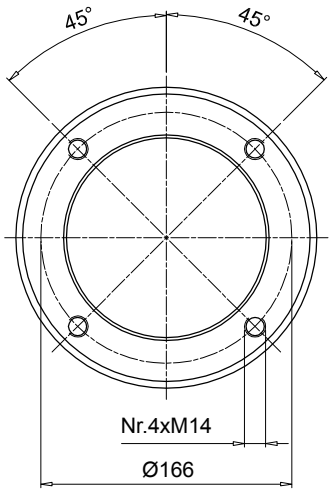

Code	Weight [kg]
AD50385	1.00

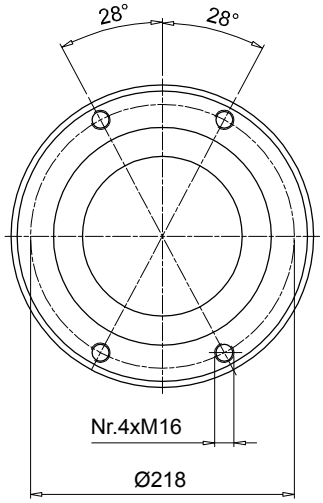

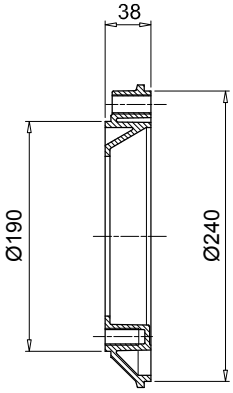

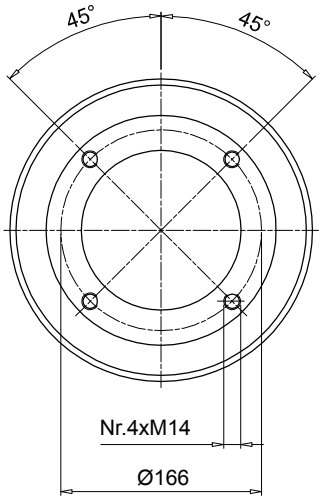

Code	Weight [kg]
AD50386	1.25

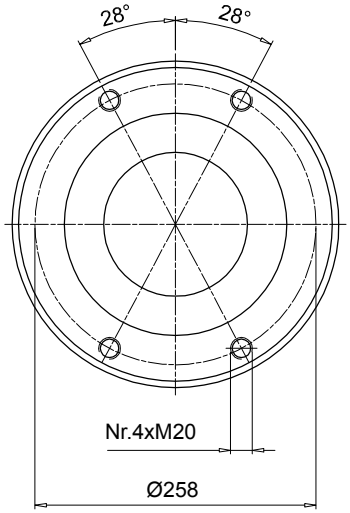

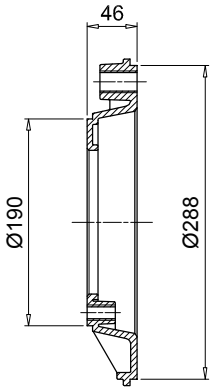

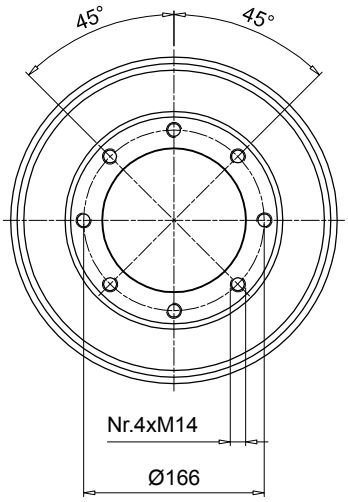

Code	Weight [kg]
AD50467	1.90

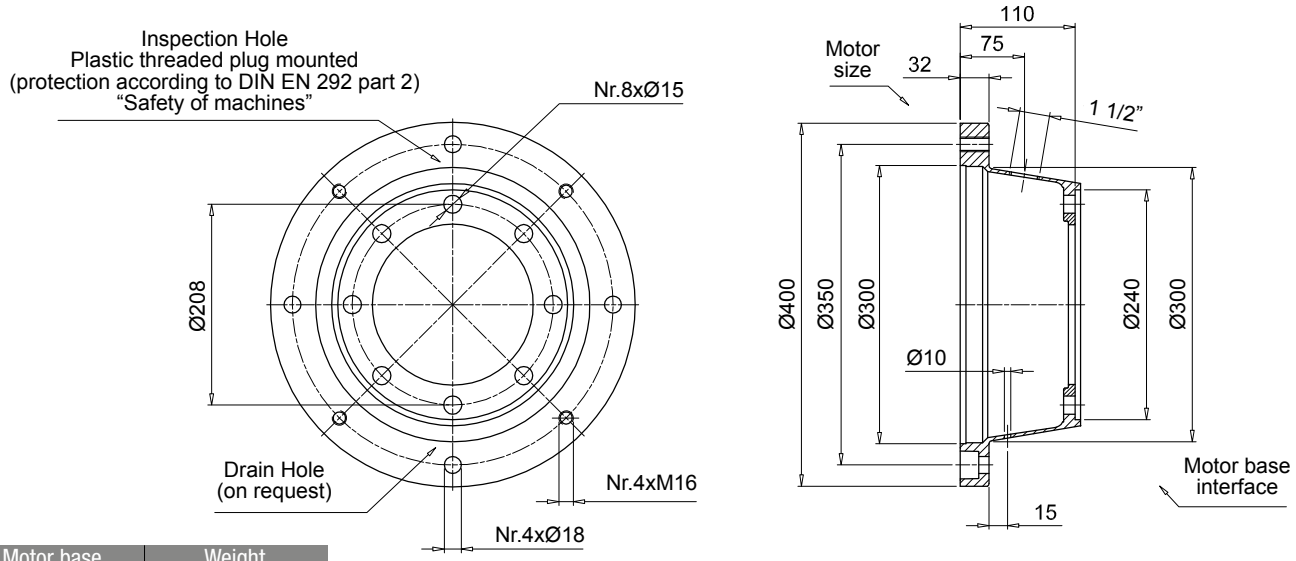

Motor base code	Weight [kg]
BMT400A1106	4.90

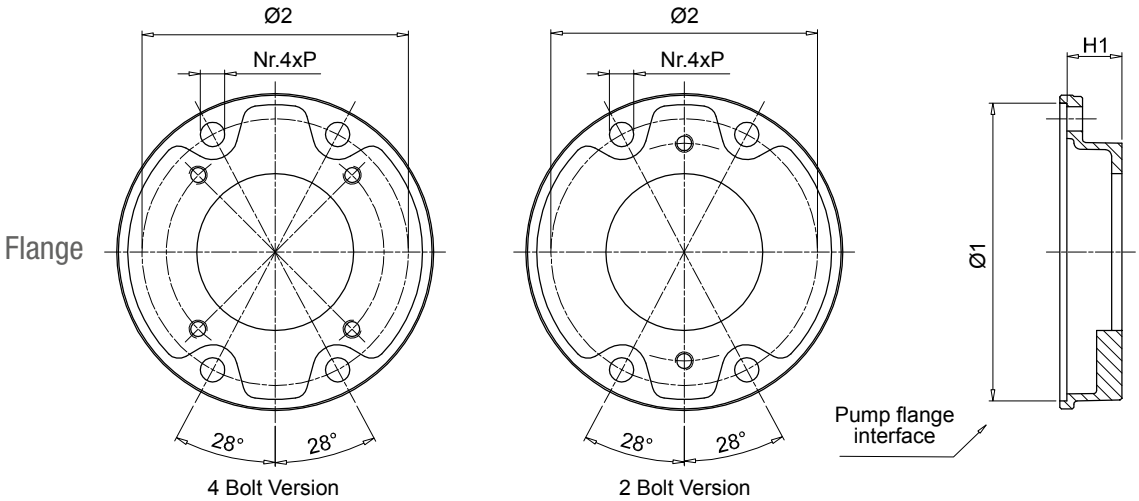

Pump flange code	H1	Ø1	Ø2	P	Mounting kit	Available pump interface 2 Bolt	Available pump interface 4 Bolt	Weight [kg]
FP5026***	26	190	170	15	KVG5 See page 107	S023 - D042 - S063 - S070 - S072 S075	S024 - S024 -S033 - S125 - S154	1
FP5032***	32					-	S024 - S031 - S096 - S125	1.1
FP5035***	35					S023 - D042 - S063 - S070 - S072 - S075 - S060 - S072 - S074 - S075 - S106	S021 - S024 - S025 - S026 - S031 - S059 - S068 - S083 - S097 - S125 - S141	0.9
FP5045***	45					S060 - S070 - S071 - S072 - S074 - S075 - S106	S021 - S024 - S025 - S026 - S068 - S125 -S141	0.9
FP5056***	56					S072	S021 - S026	1.6
FP5063***	63					S070 - S079 - S138	S021 - S025 - S068 -S141	1.7
FP5091***	91					-	S025 - S031 - S033 - S113 - S267	2.2
FP6032***	32	240	218	17	KVG6 See page 107	S081 - S082	S021 - S035	1.8
FP6045***	45					S070 - S075 - S080 - S081 - S082	S021 -S025 - S026 -S027 - S069 - S077 -S125 - S198 - S207 - S215 - S253	2.1
FP6058***	58					S079 - S080 - S081 - S082	S025 - S026 -S027 - S038 - S077 - S078 - S207 - S215 - S237	2.4
FP6070***	70					S080	-	3.0
FP6082***	82					S080 - S081	S038 - S141 - 198 - 215	3.3
FP6086***	86					S090 - S092 - S166 - S091	S021 - S026 - S027 - S077 - S078 - S114 - S132 - 198 - S200	3.4
FP6101***	101					-	S027 - S035 - S113 -S132 - S148 - S176 - S228	4.2
FP6110***	110					S080	S111	5.5
FP7052***	52	288	258	22	KVG7 See page 107	-	S028 - S108 - S112 - S133 - S192	4.4
FP7066***	66					S090 - S092 - S166	-	4.8
FP7069***	69					-	S108 - S143 - S148 - S192 - S201 - S204 - S281 -S282	4.9
FP7086***	86					S091 - S092 - S117 - S166	S022 - S027 - S028 - S108 - S112 - S184 - S192 - S201 - S228 - S300	5.2
FP7111***	111					S091 - S092 - S117 - S145	S028 - S108 - S112 - S133 - S184	6.3

Pump flange code to be complete with available pump interface

Example: **FP6032S021**

2

Flange interface

Motor base interface

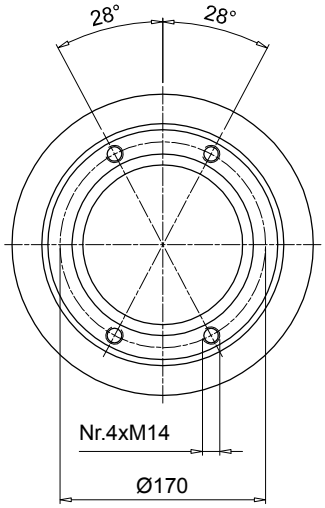

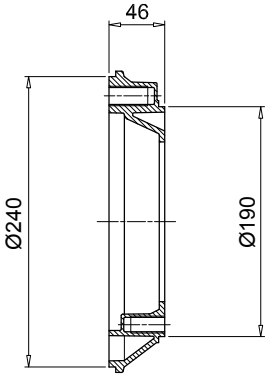

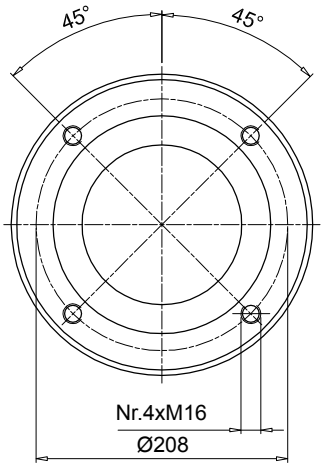

Code	Weight [kg]
AD60465	1.30

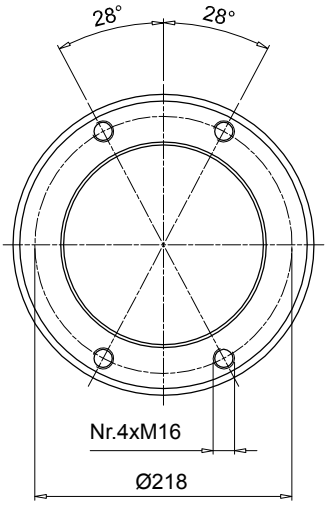

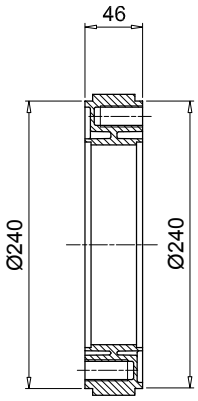

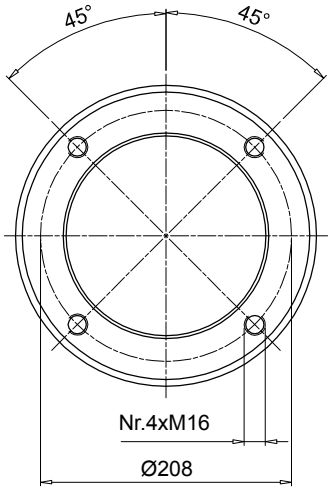

Code	Weight [kg]
AD60466	1.60

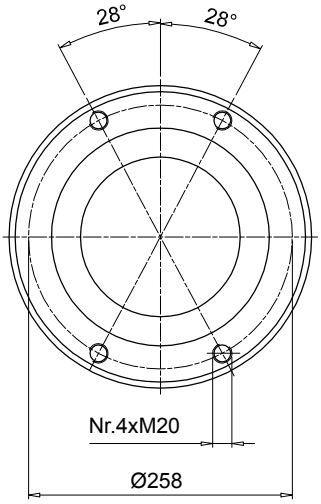

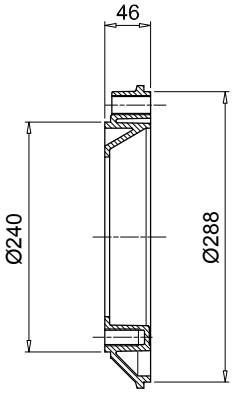

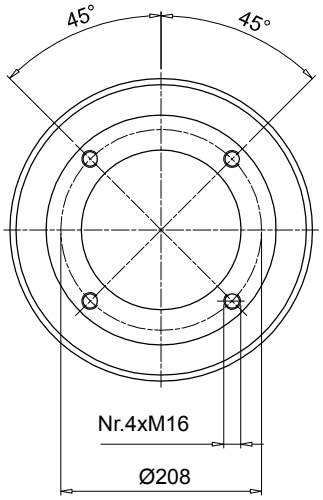

Code	Weight [kg]
AD60467	2.50

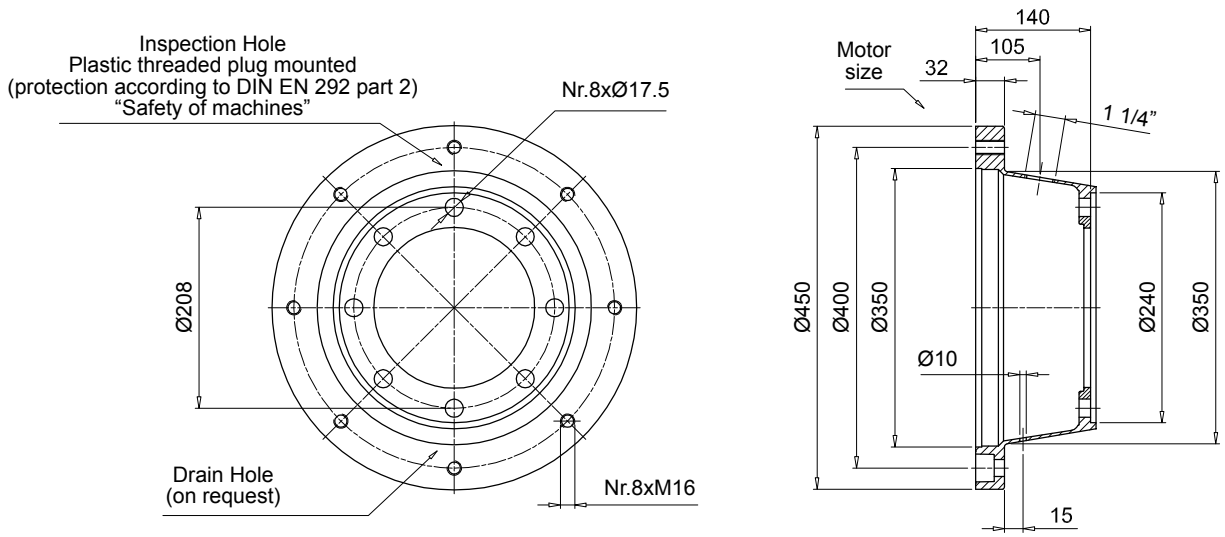

Motor base code	Weight [kg]
BMT450A1406	5.00

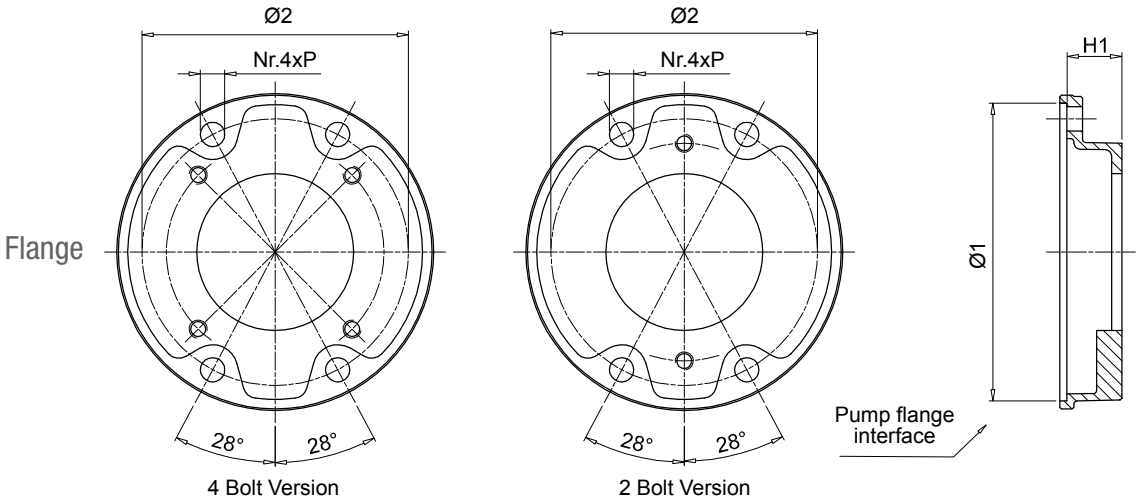

Pump flange code	H1	Ø1	Ø2	P	Mounting kit	Available pump interface 2 Bolt	Available pump interface 4 Bolt	Weight [kg]
FP5026***	26	190	170	15	KVG5 See page 107	S023 - D042 - S063 - S070 - S072 S075	S024 - S024 -S033 - S125 - S154	1.0
FP5032***	32					-	S024 - S031 - S096 - S125	1.1
FP5035***	35					S023 - D042 - S063 - S070 - S072 - S075 - S060 - S072 - S074 - S075 - S106	S021 - S024 - S025 - S026 - S031 - S059 - S068 - S083 - S097 - S125 - S141	0.9
FP5045***	45					S060 - S070 - S071 - S072 - S074 - S075 - S106	S021 - S024 - S025 - S026 - S068 - S125 -S141	0.9
FP5056***	56					S072	S021 - S026	1.6
FP5063***	63					S070 - S079 - S138	S021 - S025 - S068 -S141	1.7
FP5091***	91					-	S025 - S031 - S033 - S113 - S267	2.2
FP6032***	32	240	218	17	KVG6 See page 107	S081 - S082	S021 - S035	1.8
FP6045***	45					S070 - S075 - S080 - S081 - S082	S021 -S025 - S026 -S027 - S069 - S077 -S125 - S198 - S207 - S215 - S253	2.1
FP6058***	58					S079 - S080 - S081 - S082	S025 - S026 -S027 - S038 - S077 - S078 - S207 - S215 - S237	2.4
FP6070***	70					S080	-	3.0
FP6082***	82					S080 - S081	S038 - S141 - 198 - 215	3.3
FP6086***	86					S090 - S092 - S166 - S091	S021 - S026 - S027 - S077 - S078 - S114 - S132 - 198 - S200	3.4
FP6101***	101					-	S027 - S035 - S113 -S132 - S148 - S176 - S228	4.2
FP6110***	110					S080	S111	5.5
FP7052***	52	288	258	22	KVG7 See page 107	-	S028 - S108 - S112 - S133 - S192	4.4
FP7066***	66					S090 - S092 - S166	-	4.8
FP7069***	69					-	S108 - S143 - S148 - S192 - S201 - S204 - S281 -S282	4.9
FP7086***	86					S091 - S092 - S117 - S166	S022 - S027 - S028 - S108 - S112 - S184 - S192 - S201 - S228 - S300	5.2
FP7111***	111					S091 - S092 - S117 - S145	S028 - S108 - S112 - S133 - S184	6.3

Pump flange code to be complete with available pump interface
Example: **FP6032S021**

2

Flange interface

Motor base interface

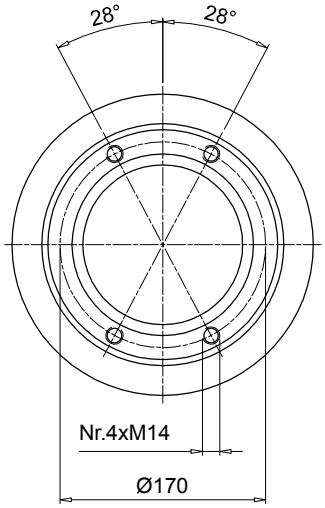

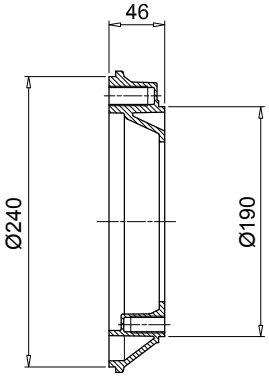

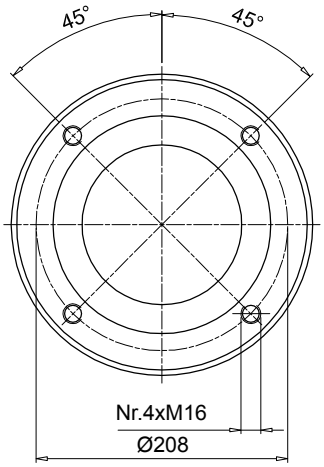

Code	Weight [kg]
AD60465	1.30

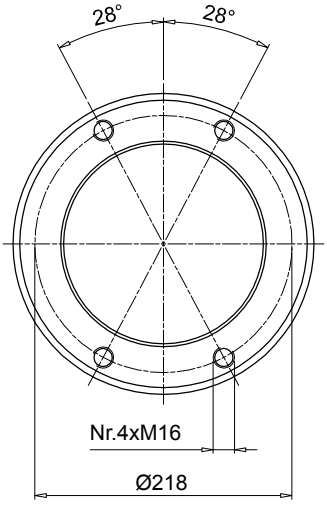

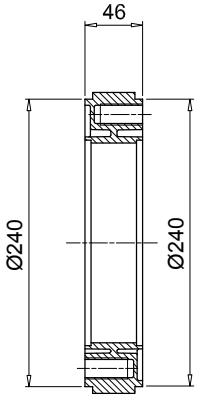

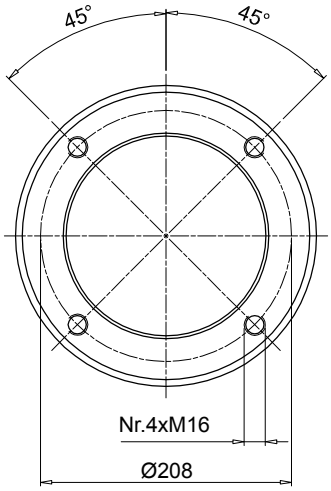

Code	Weight [kg]
AD60466	1.60

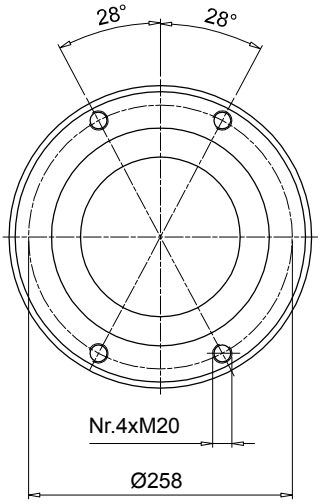

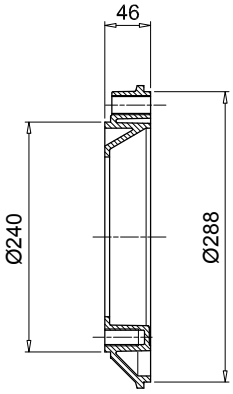

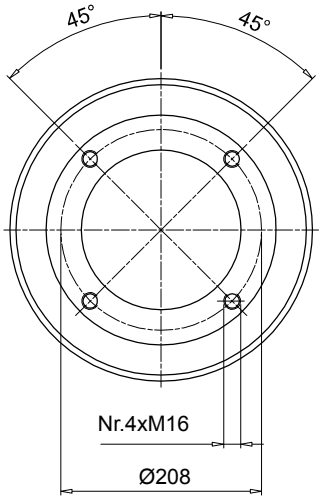

Code	Weight [kg]
AD60467	2.50

1

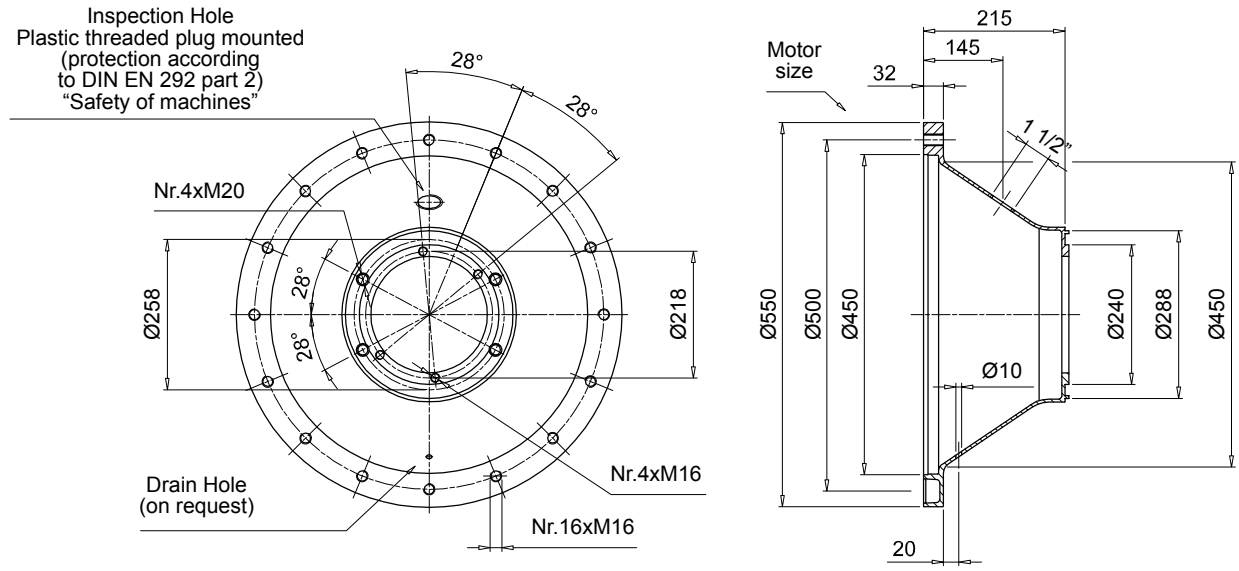

Motor base code	Weight [kg]
BMT550A21567	8.80

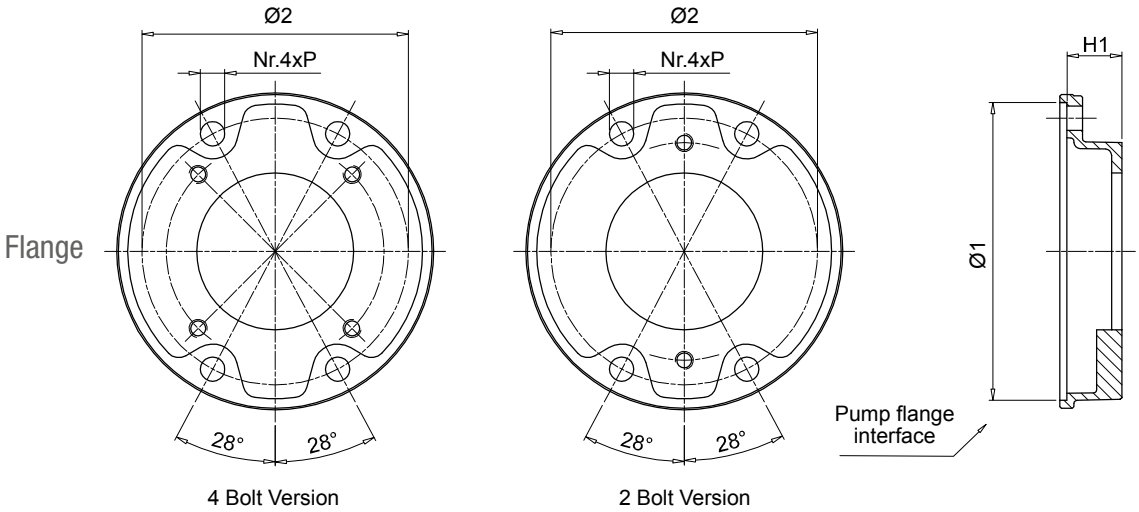

3

Pump flange code	H1	Ø1	Ø2	P	Mounting kit	Available pump interface 2 Bolt	Available pump interface 4 Bolt	Weight [kg]
FP6032***	32	240	218	17	KVG6 See page 107	S081 - S082	S021 - S035	1.8
FP6045***	45					S070 - S075 - S080 - S081 - S082	S021 -S025 - S026 -S027 - S069 - S077 -S125 - S198 - S207 - S215 - S253	2.1
FP6058***	58					S079 - S080 - S081 - S082	S025 - S026 -S027 - S038 - S077 - S078 - S207 - S215 - S237	2.4
FP6070***	70					S080	-	3.0
FP6082***	82					S080 - S081	S038 - S141 - 198 - 215	3.3
FP6086***	86					S090 - S092 - S166 - S091	S021 - S026 - S027 - S077 - S078 - S114 - S132 - 198 - S200	3.4
FP6101***	101					-	S027 - S035 - S113 -S132 - S148 - S176 - S228	4.2
FP6110***	110					S080	S111	5.5
FP7052***	52	288	258	22	KVG7 See page 107	-	S028 - S108 - S112 - S133 - S192	4.4
FP7066***	66					S090 - S092 - S166	-	4.8
FP7069***	69					-	S108 - S143 - S148 - S192 - S201 - S204 - S281 -S282	4.9
FP7086***	86					S091 - S092 - S117 - S166	S022 - S027 - S028 - S108 - S112 - S184 - S192 - S201 - S228 - S300	5.2
FP7111***	111					S091 - S092 - S117 - S145	S028 - S108 - S112 - S133 - S184	6.3

Pump flange code to be complete with available pump interface
Example: **FP6032S021**

1

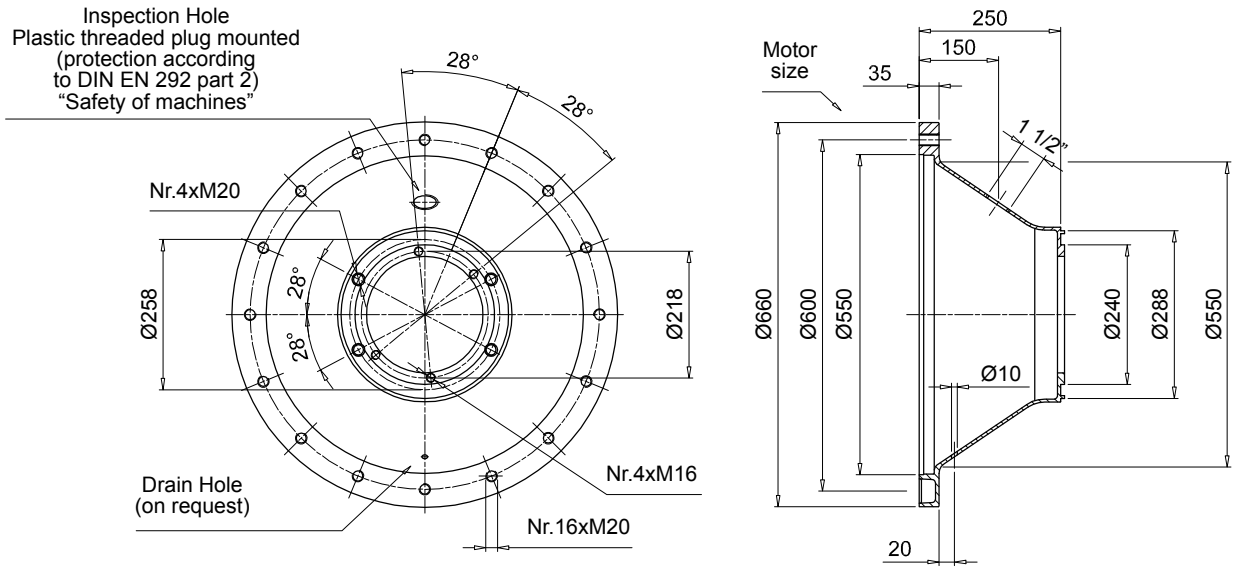

Motor base code	Weight [kg]
BMT660A25067	12.00

Flange

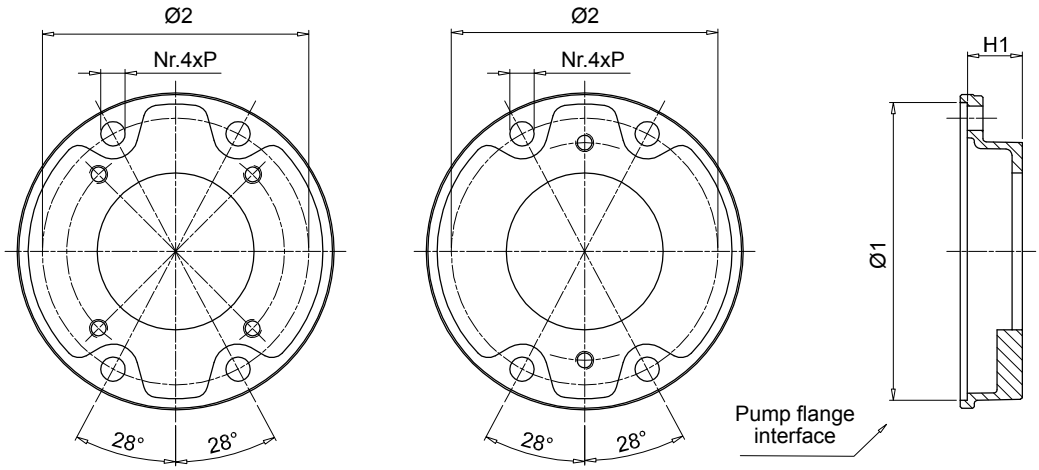

4 Bolt Version

2 Bolt Version

3

Pump flange code	H1	Ø1	Ø2	P	Mounting kit	Available pump interface 2 Bolt	4 Bolt	Weight [kg]
FP6032***	32	240	218	17	KVG6 See page 107	S081 - S082	S021 - S035	1.8
FP6045***	45					S070 - S075 - S080 - S081 - S082	S021 -S025 - S026 -S027 - S069 - S077 -S125 - S198 - S207 - S215 - S253	2.1
FP6058***	58					S079 - S080 - S081 - S082	S025 - S026 -S027 - S038 - S077 - S078 - S207 - S215 - S237	2.4
FP6070***	70					S080	-	3.0
FP6082***	82					S080 - S081	S038 - S141 - 198 - 215	3.3
FP6086***	86					S090 - S092 - S166 - S091	S021 - S026 - S027 - S077 - S078 - S114 - S132 - 198 - S200	3.4
FP6101***	101					-	S027 - S035 - S113 -S132 - S148 - S176 - S228	4.2
FP6110***	110					S080	S111	5.5
FP7052***	52	288	258	22	KVG7 See page 107	-	S028 - S108 - S112 - S133 - S192	4.4
FP7066***	66					S090 - S092 - S166	-	4.8
FP7069***	69					-	S108 - S143 - S148 - S192 - S201 - S204 - S281 -S282	4.9
FP7086***	86					S091 - S092 - S117 - S166	S022 - S027 - S028 - S108 - S112 - S184 - S192 - S201 - S228 - S300	5.2
FP7111***	111					S091 - S092 - S117 - S145	S028 - S108 - S112 - S133 - S184	6.3

Pump flange code to be complete with available pump interface
Example: **FP6032S021**

1

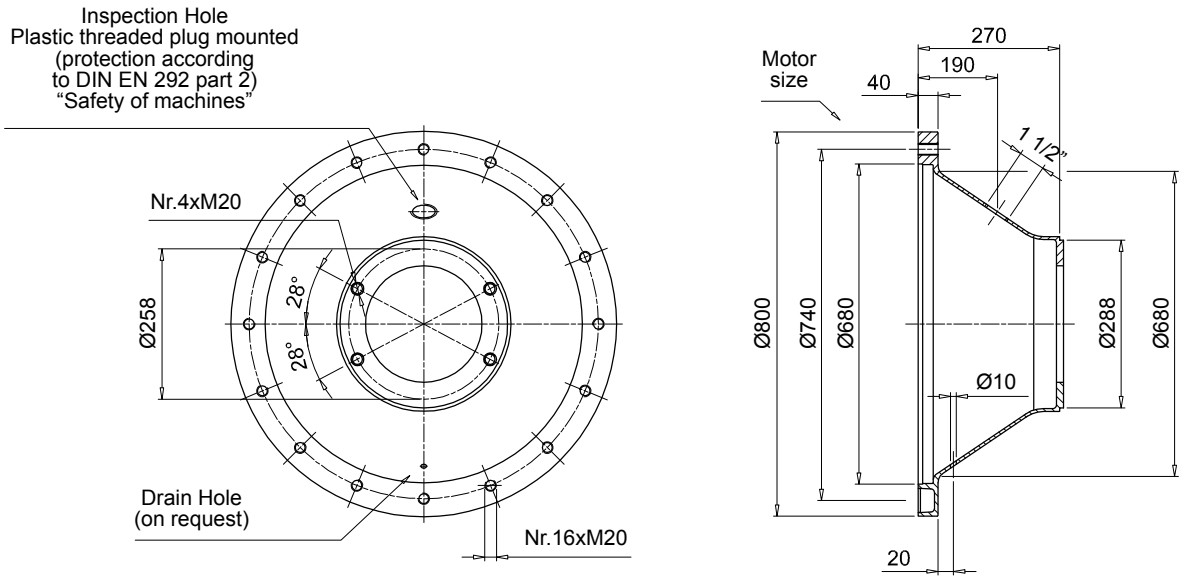

Motor base code	Weight [kg]
BAD800A2707	31.00

Flange

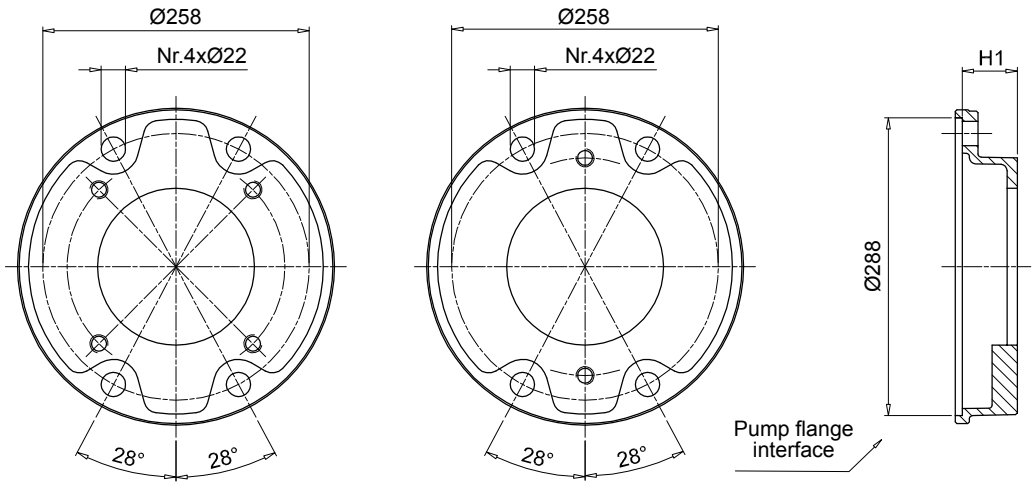

4 Bolt Version

2 Bolt Version

3

Pump flange code	H1	Ø1	Ø2	P	Mounting kit	Available pump interface 2 Bolt	Available pump interface 4 Bolt	Weight [kg]
FP7052***	52	288	258	22	KVG7 See page 107	-	S028 - S108 - S112 - S133 - S192	4.4
FP7066***	66					S090 - S092 - S166	-	4.8
FP7069***	69					-	S108 - S143 - S148 - S192 - S201 - S204 - S281 -S282	4.9
FP7086***	86					S091 - S092 - S117 - S166 -	S022 - S027 - S028 - S108 - S112 - S184 - S192 - S201 - S228 - S300	5.2
FP7111***	111					S091 - S092 - S117 - S145	S028 - S108 - S112 - S133 - S184	6.3

Pump flange code to be complete with available pump interface
Example: **FP7052S028**

KVG1

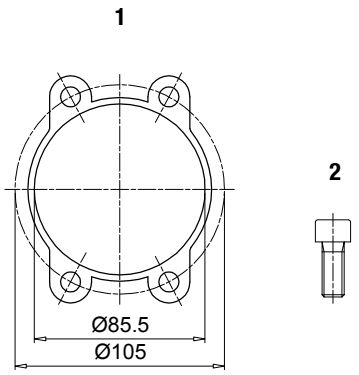

Components				
Item	Description	Q.ty	Material	Torque
1	Gasket for auxiliary flange FR1	1	Paper	-
2	Screw T.C.E.I. M8x20 UNI-5931 8.8	4	Steel	15 Nm

KVG5

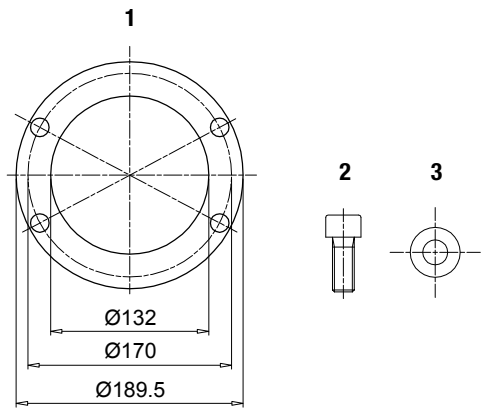

Components				
Item	Description	Q.ty	Material	Torque
1	Gasket for auxiliary flange FP5 / AD5	1	Paper	-
2	Screw T.C.E.I. M14x35 UNI-5931 8.8	4	Steel	90 Nm
3	Washer Schnorr 14	4	Steel	-

KVG6

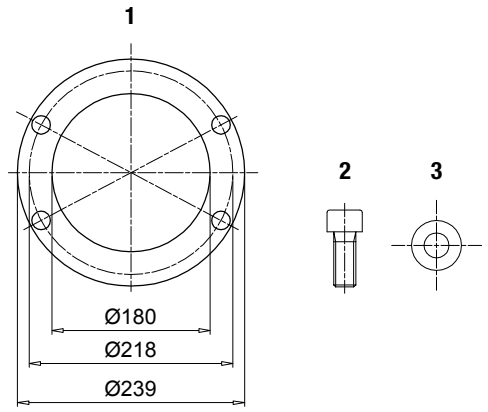

Components				
Item	Description	Q.ty	Material	Torque
1	Gasket for auxiliary flange FP6 / AD6	1	Paper	-
2	Screw T.C.E.I. M16x35 UNI-5931 8.8	4	Steel	130 Nm
3	Washer Schnorr 16	4	Steel	-

KVG7

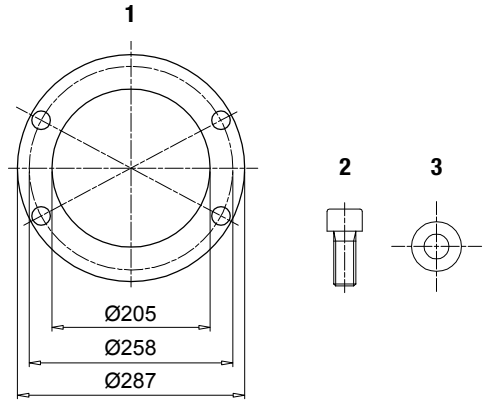

Components				
Item	Description	Q.ty	Material	Torque
1	Gasket for auxiliary flange FP7 / AD7	1	Paper	-
2	Screw T.C.E.I. M20x50 UNI-5931 8.8	4	Steel	200 Nm
3	Washer Schnorr 20	4	Steel	-

The range of products is completed by a number of accessories, including:

DAMPING RINGS, intended mainly for use with motor-pump units positioned vertically and with the pump submerged in the oil tank.

FOOT BRACKETS, which serve to support the motor pump unit in the event that the selected electric motor does not have mounting feet.

DAMPING RODS, to be mounted under the electric motor feet or under the foot brackets.

CLEANING COVERS, facilitating the maintenance of oil tanks in hydraulic power units, without necessarily having to dismantle the unit.

ALUMINIUM TANKS of 10 litres capacity, allowing the assembly of a compact hydraulic power unit.

Accessories

ANM A	Damping rings	page 110
PDM A	Foot brackets	112
MPDR PDMA - MPDR	Damping rods	113
OB	Cleaning covers	114
SE10	Aluminium tanks	119

Technical data

Positioned between the bell-housing motor flange and lid of the tank, they help to reduce the transmission of the vibrations and emission of noise generated by the system.

Damping rings provide a perfect hydraulic sealing actions by virtue of their special profile; damping rings are available for IEC electric motors from size 80 to size 315.

Materials
Internal ring: pressure die-cast aluminium alloy
External body: NBR 75 Shore A

Temperature
From -30 °C to +80 °C

Compatibility with fluids
- Mineral oils types HH-HL-HM-HR-HV, to ISO 6743/4 standard
- Water based emulsions types HFAE-HFAS, to ISO 6743/4 standard
- Water glycol type HFC, to ISO 6743/4 standard: ask for anodized version

Special Applications
Any applications not covered by the normal indications contained in this catalogue must be evaluated and approved by MP Filtri Technical and Sales Department

Example of assembly

In order to warranty the application, to proceed with the calculation of the max weight and moment with the following formulas.

Values higher than those in the table could damage the product and couldn't warranty the conformity of the application!

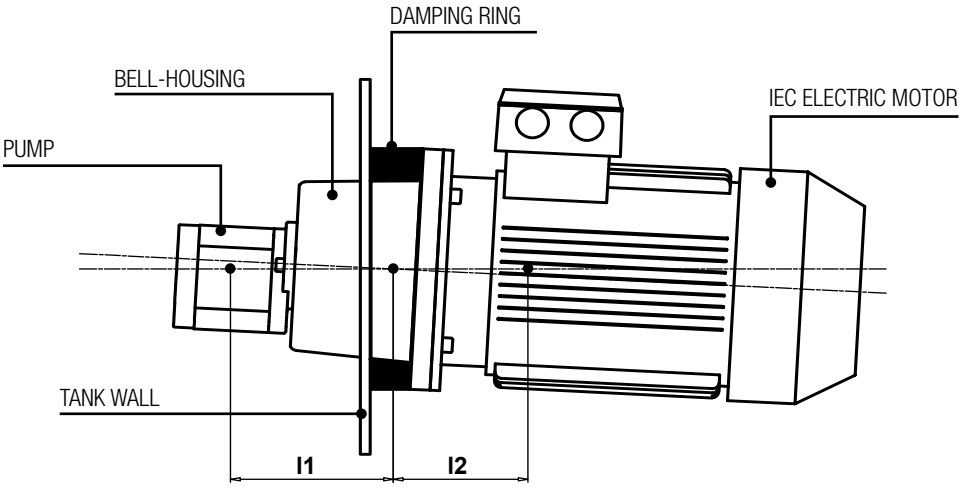

F perm ≥ Fp + Fm

Mb perm ≥ Fm x l1 - Fp x l2

Permissible radial weight and bending load for damping rings

Code	F perm [N]	Mb perm [N·m]
ANM A 200	370	30
ANM A 250	720	65
ANM A 300	1450	175
ANM A 350	3600	740
ANM A 400	4800	1100
ANM A 450	6600	1600
ANM A 550	13000	4400
ANM A 660	24000	9000

Legend of symbol
F perm = ammissible load (N)
Fp = pumps weight (N)
Fm = motor weight (N)
Mb perm = bending load (N·m)

Dimensions

ANM A 200 ÷ 400

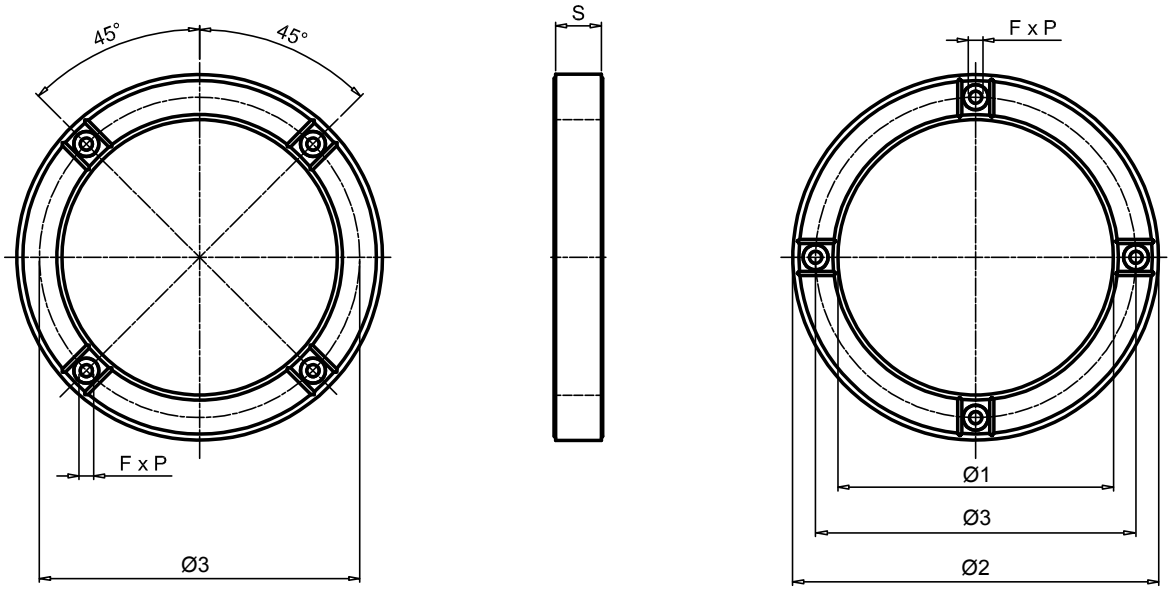

Code	IEC - Electric motors	Dimensions [mm] Ø1	Ø2	Ø3	S	F x P	Nr. F	Screw tightening torque [N·m]	Weight [kg]
ANM A 200	80, 90S / 90L	144	200	165	40	M10x16	4+4	23	1.70
ANM A 250	100L / 112M	191	250	215	45	M12x16		40	2.53
ANM A 300	132S / 132M	238	300	265	50	M12x16		40	2.15
ANM A 350	160L/160M, 180L/180M	260	350	300	58	M16x20		100	3.95
ANM A 400	200L	301	400	350	50	M16x25		100	4.60

ANM A 450 ÷ 660

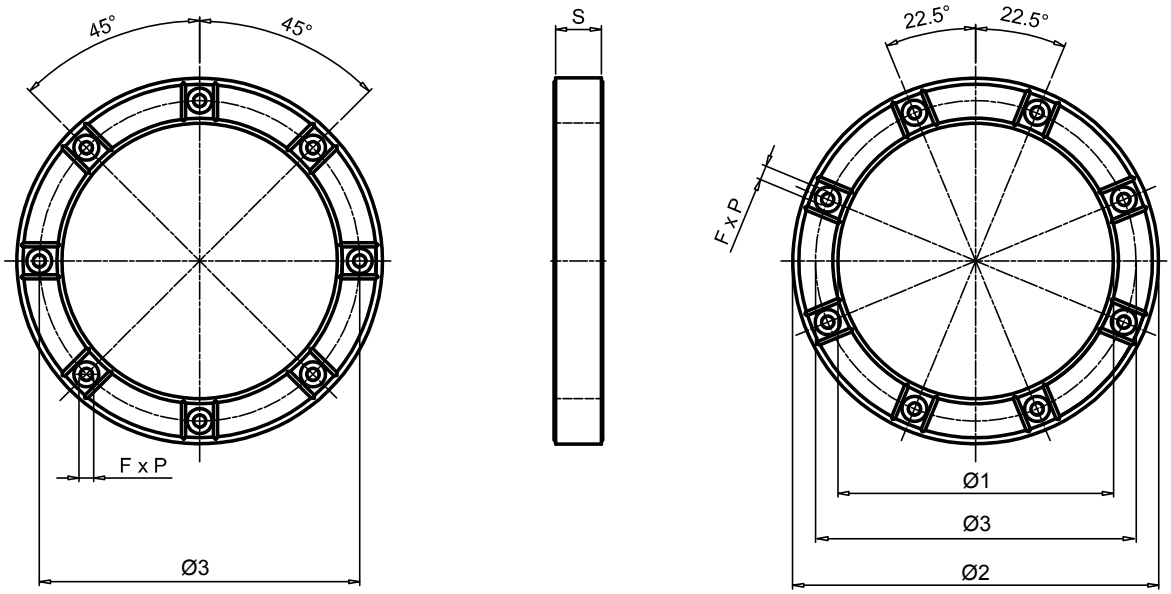

Code	IEC - Electric motors	Dimensions [mm] Ø1	Ø2	Ø3	S	F x P	Nr. F	Screw tightening torque [N·m]	Weight [kg]
ANM A 450	225S / 225M	352	450	400	60	M16x25	8+8	100	6.20
ANM A 550	250M, 280M / 280S	452	550	500	60	M16x25		210	7.76
ANM A 660	315M / 315S	552	660	600	67	M20x25		410	11.25

Technical data

The foot brackets are proportioned to support IEC Electric motors with B5 flange without feet.

The range is available from size 71 to size 180.

Compatibility with fluids

- Mineral oils types HH-HL-HM-HR-HV, to ISO 6743/4 standard
- Water based emulsions types HFAE-HFAS, to ISO 6743/4 standard
- Water glycol type HFC, to ISO 6743/4 standard: ask for anodized version

Materials

Foot bracket: pressure die-cast aluminium alloy

Temperature

From -30 °C to +80 °C

Dimensions

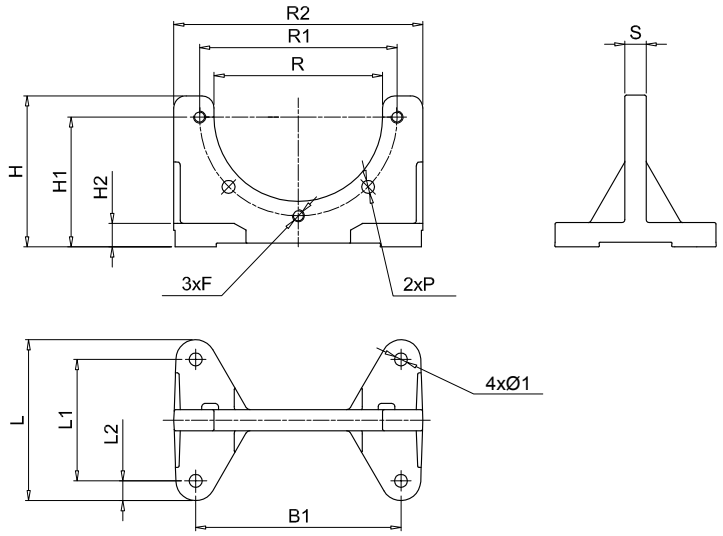

Foot bracket	Dimensions [mm]															Weight [kg]
	B	B1	R2	L	L1	L2	H	H1	H2	R	R1	S	P	Ø1	F	
PDM A 160	160	135	180	106	80	13	100	86	16	111	130	14	8.5	8.5	M8	0.45
PDM A 200	200	175	207	128	98	21	128	115	14	146	165	14	11.0	11.5	M10	0.60
PDM A 250	250	220	262	172	130	21	157	145	18	191	215	16	13.0	13.5	M12	1.20
PDM A 300	300	270	320	210	160	25	188	170	18	235	265	20	13.0	13.5	M12	1.80

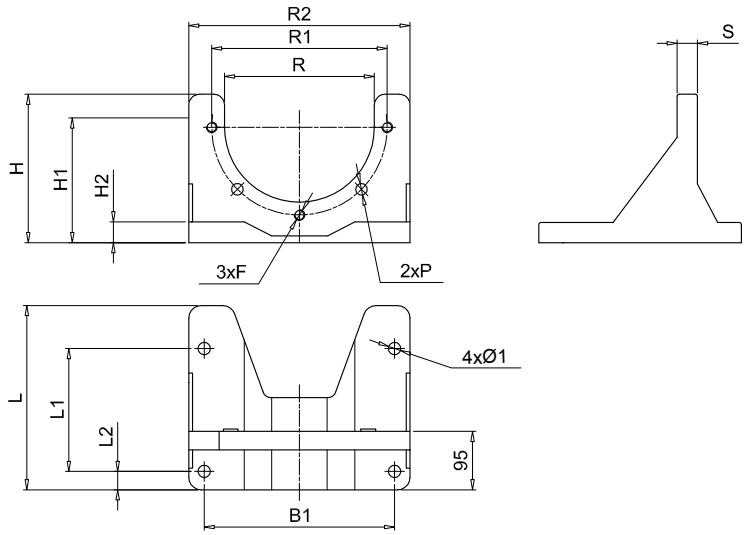

Foot bracket	Dimensions [mm]															Weight [kg]
	B	B1	R2	L	L1	L2	H	H1	H2	R	R1	S	P	Ø1	F	
PDM A 350	350	310	360	300	200	30	220	200	30	261	300	30	18	13	M16	4.80

Technical data

Damping rods are element to reduce the transmission of the vibrations and emission of noise generated of the system.

Damping rods are available for IEC Electric motors from size 71 to size 315L and for MP FILTRI foot bracket

Compatibility with fluids

- Mineral oils types HH-HL-HM-HR-HV, to ISO 6743/4 standard
- Water based emulsions types HFAE-HFAS, to ISO 6743/4 standard
- Water glycol type HFC, to ISO 6743/4 standard: ask for anodized version

Materials

Plate: steel black colour
Damping element: NBR 60 Shore A

Temperature

From -20 °C to +80 °C

Special Applications

Any applications not covered by the normal indications contained in this catalogue must be evaluated and approved by the MP Filtri Technical and Sales Department

Dimensions

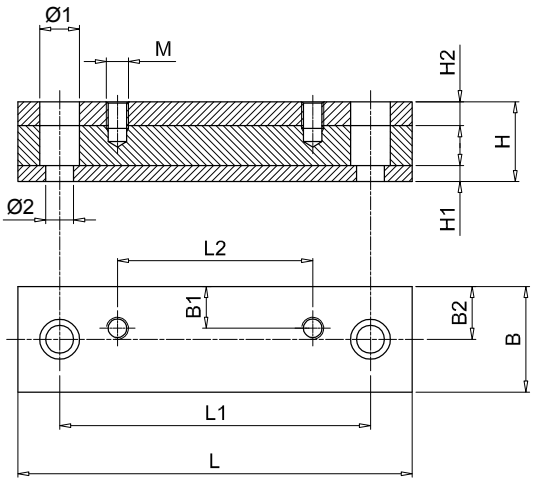

Damping rods for foot brackets PDMA series.

For foot brackets see page 112

Code	Dimensions [mm] L	L1	L2	B	B1	B2	H	H1	H2	Ø1	Ø2	M	Weight [kg]
MPDR PDMA160P	196	156	80	50	21	25	40	8	12	20	14	M8	1.5
MPDR PDMA200P	196	156	98	50	21	25	40	8	12	20	14	M10	1.5
MPDR PDMA250P	240	205	130	50	24	25	40	8	12	20	14	M12	2.0
MPDR PDMA300P	280	245	160	50	20	25	45	8	12	20	14	M12	2.5
MPDR PDMA350P	446	400	200	70	35	35	60	15	15	26	14	M12	8.0

Damping rods for electrical motors UNEL-MEC

Code	L	L1	L2	B	B1	B2	H	H1	H2	Ø1	Ø2	M	Weight [kg]
MPDR 71P	196	156	90	50	21	25	40	8	12	20	14	M6	1.5
MPDR 80P	176	146	100	50	22	25	40	8	12	20	14	M8	1.7
MPDR 90SP	196	156	100	50	24.5	25	40	8	12	20	14	M8	1.7
MPDR 90LP	240	205	125	50	24	25	40	8	12	20	14	M8	2.0
MPDR 100LP	240	205	140	50	22	25	40	8	12	20	14	M10	2.0
MPDR 132SP	280	245	140	50	20	25	45	8	12	20	14	M10	2.5
MPDR 132MP	280	245	178	50	20	25	45	8	12	20	14	M10	2.5
MPDR 160MP	340	300	210	70	28	35	60	15	15	26	18	M12	6.0
MPDR 160LP	416	370	254	70	28	35	60	15	15	26	18	M12	7.5
MPDR 180MP	416	370	241	70	35	35	60	15	15	26	18	M12	7.5
MPDR 180LP	446	400	279	70	35	35	60	15	15	26	18	M12	8.0
MPDR 200LP	492	430	305	70	35	35	60	15	15	33	22	M16	8.9
MPDR 225SP	492	430	286	70	35	35	60	15	15	33	22	M16	8.9
MPDR 225MP	492	445	311	70	35	35	60	15	15	33	22	M16	8.9
MPDR 250MP	492	445	349	100	50	50	60	15	15	33	22	M20	12.5
MPDR 280SP	614	570	368	100	50	50	60	15	15	33	22	M20	15.1
MPDR 280MP	614	570	419	100	50	50	60	15	15	33	22	M20	15.1
MPDR 315SP	614	570	406	120	60	60	60	15	15	33	22	M24	26.5
MPDR 315MP	614	570	457	120	60	60	60	15	15	33	22	M24	26.5
MPDR 315LP	704	660	508	120	60	60	60	15	15	33	22	M24	29.2

Technical data

These pressure die-cast aluminium alloy doors offer superior mechanical strength and are manufactured to DIN 24339 standard. They provide easy access to the inside of the oil tank for inspection and cleaning purposes.
On request and for small quantities, to be agreed with MP Filtri Technical and Sales Department, inspection doors can be supplied with:
- Customer logo.
- Hole cut for visual level indicator.
- Hole cut for visual and electrical level indicator.
- Oil sample plug

Compatibility with fluids
- Mineral oils types HH-HL-HM-HR-HV, to ISO 6743/4 standard
- Water based emulsions types HFAE-HFAS, to ISO 6743/4 standard
- Water glycol type HFC, to ISO 6743/4 standard: ask for anodized version

Materials
Cleaning covers: pressure die-cast aluminium alloy
Seal: NBR 70 Shore A

Temperature
From -30 °C to +80 °C

Special Applications
Any applications not covered by the normal indications contained in this catalogue must be evaluated and approved by MP Filtri Technical and Sales Department

Dimensions

Cleaning cover according to DIN 24339

OB275

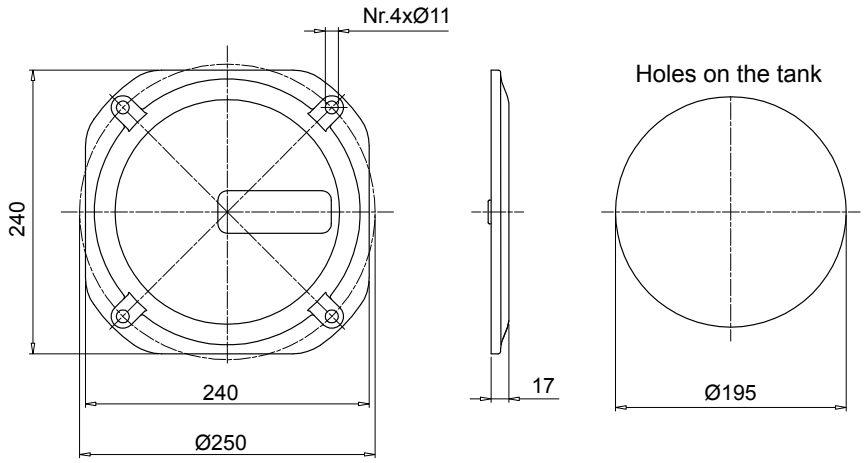

Code	Description	Seal	Weight [kg]
OB275P01GN	Door with MP Logo	NBR	2.06
OB275P02GN	Blank cover	NBR	2.06
OB275P01GV	Door with MP Logo	FPM	2.06
OB275P02GV	Blank cover	FPM	2.06

Code	Description	Weight [kg]
OB275P01	Door with MP Logo	1.76
OB275P02	Blank cover	1.76
GU0275NBR	Seal	1.76
GU0275VTN	Seal	1.76

OB400

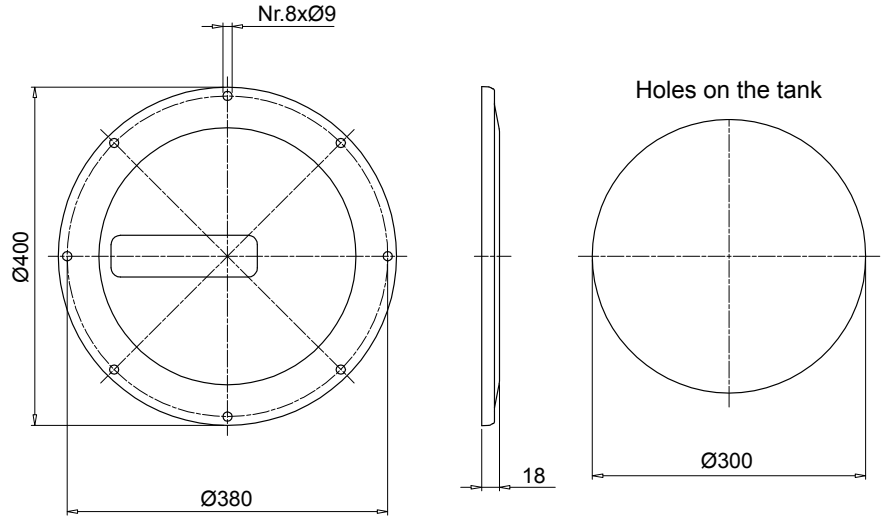

Code	Description	Seal	Weight [kg]
OB400P01GN	Door with MP Logo	NBR	3.20
OB400P02GN	Blank cover	NBR	3.20
OB400P01GV	Door with MP Logo	FPM	3.20
OB400P02GV	Blank cover	FPM	3.20

Code	Description	Weight [kg]
OB400P01	Door with MP Logo	2.90
OB400P02	Blank cover	2.90
GU0400DINNBR	Seal	2.90
GU0400DINVTN	Seal	2.90

Dimensions

OB350

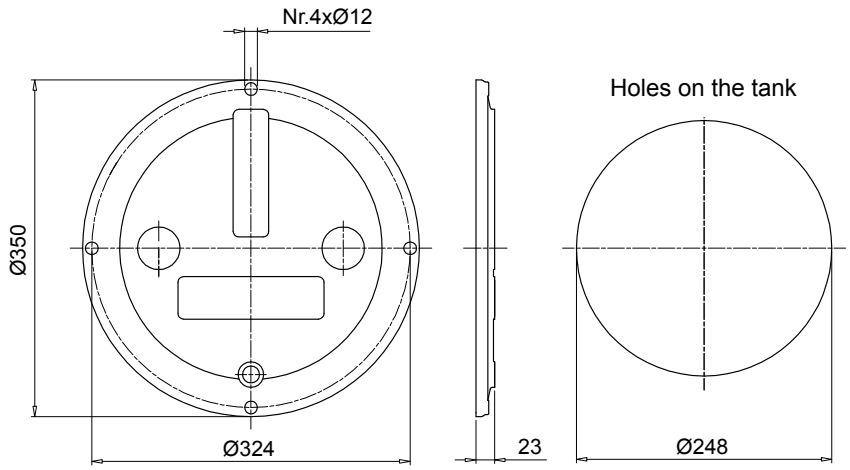

Code	Description	Seal	Weight [kg]
OB350P01GN	Door with MP Logo	NBR	2.10
OB350P02GN	Blank cover	NBR	2.10
OB350P01GV	Door with MP Logo	FPM	2.10
OB350P02GV	Blank cover	FPM	2.10

Code	Description	Weight [kg]
OB350DIN000	Door	1.80
GU0350DINNBR	Seal	1.80
GU0350DINVTN	Seal	1.80

OB356

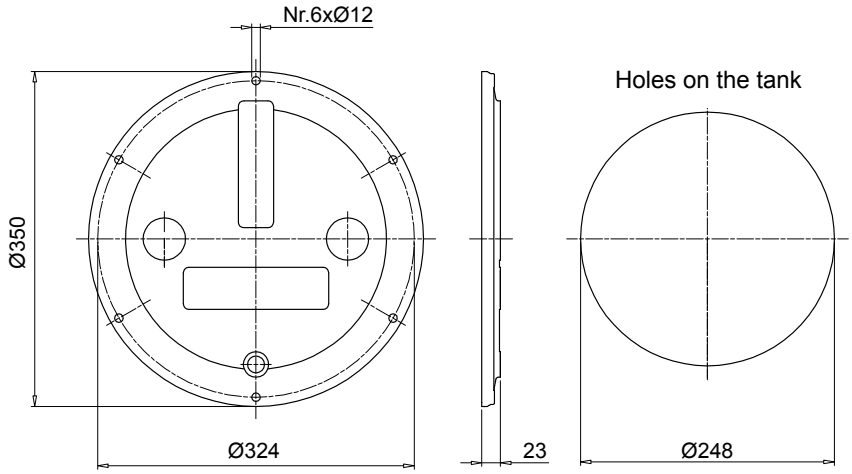

Code	Description	Seal	Weight [kg]
OB356P01GN	Door with MP Logo	NBR	2.10
OB356P02GN	Blank cover	NBR	2.10
OB356P01GV	Door with MP Logo	FPM	2.10
OB356P02GV	Blank cover	FPM	2.10

Code	Description	Weight [kg]
OB356DIN000	Door	1.80
GU0350DINNBR	Seal	1.80
GU0350DINVTN	Seal	1.80

OB475

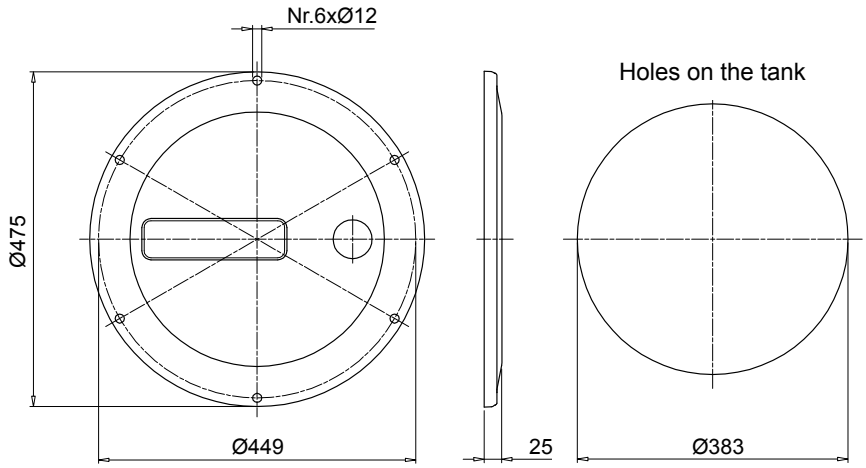

Code	Description	Seal	Weight [kg]
OB475P01GN	Door with MP Logo	NBR	3.70
OB475P02GN	Blank cover	NBR	3.70
OB475P01GV	Door with MP Logo	FPM	3.70
OB475P02GV	Blank cover	FPM	3.70

Code	Description	Weight [kg]
OB475P01	Door with MP Logo	3.40
OB475P02	Blank cover	3.40
GU0475DINNBR	Seal	3.40
GU0475DINVTN	Seal	3.40

Oil level indicator **LVA** series - vertical shape

Technical data

Materials
Transparent amorphous polyamide lens
Polyamide guard
Seals: NBR - FPM

Operating pressure
Max 1 bar at +80°C

Operating temperature
From -25 °C to +80 °C

Tightening torque
10 N·m max.

Mineral oils
Synthetic oils
Water base emulsions
Phosphoric esters

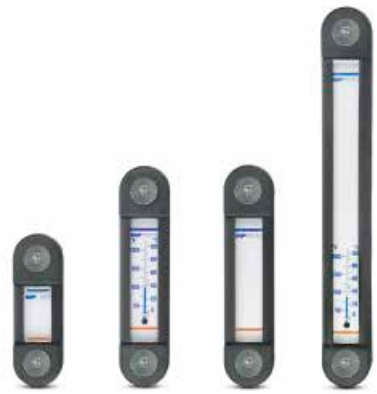

Installation

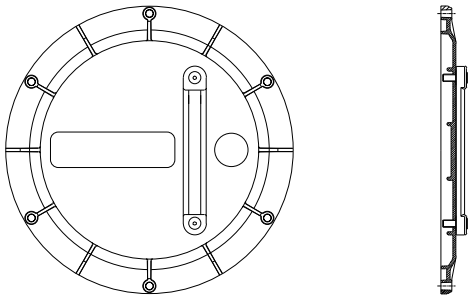

Dimensions

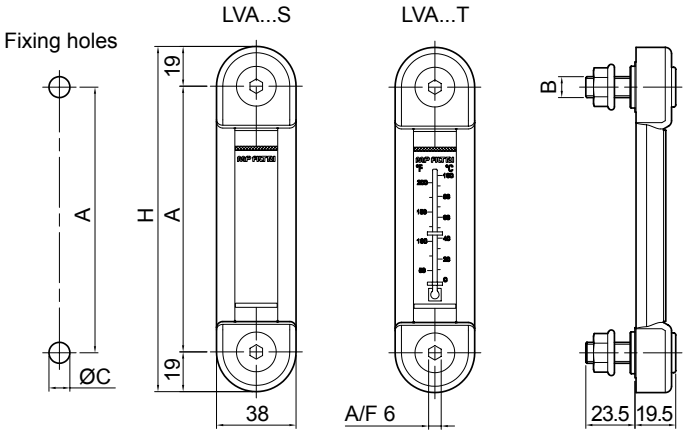

Size	A [mm]	H [mm]
LVA 10	76	114
LVA 20	127	165
LVA 30	254	292

Type	B [mm]	ØC [mm]
LVA...M10	M10	10.5
LVA...M12	M12	12.5
LVA...U38	3/8" UNC	10.0
LVA...U12	1/2"UNC	13.5

Packaging

Type	Nr. pieces per pack
LVA	10

Preparing for to fit the level on request

Indicator code	OB275**	OB350**	OB356**	OB400**	OB475**
LVA 10**	•	•	•	•	•
LVA 20**		•	•	•	•
LVA 30**				•	•

Electrical oil level indicators **LEG** series

Technical data

LEG series electrical oil level indicators are supplied with a 3-hole fixing flange and a reed switch having NC-NO contacts.

Designed typically for installation on the vertical walls of oil tanks, these instruments can also be mounted to inspection doors of the OB475 series as indicators of minimum and maximum oil levels in the tank.

Warning

To operate correctly, the float must be positioned vertically and at a minimum distance of 35 mm from walls made of ferrous metal.
To change the contact from NC to NO, simply turn the float upside down.
The electrical properties indicated are referred to resistive loads; for capacitive and inductive loads and incandescent lamps, use protection circuits.

Electrical symbol:

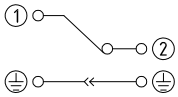

1: Common
2: Level

Note: to invert the contact status from NC to NO and vice versa, simply invert the float.

Installation

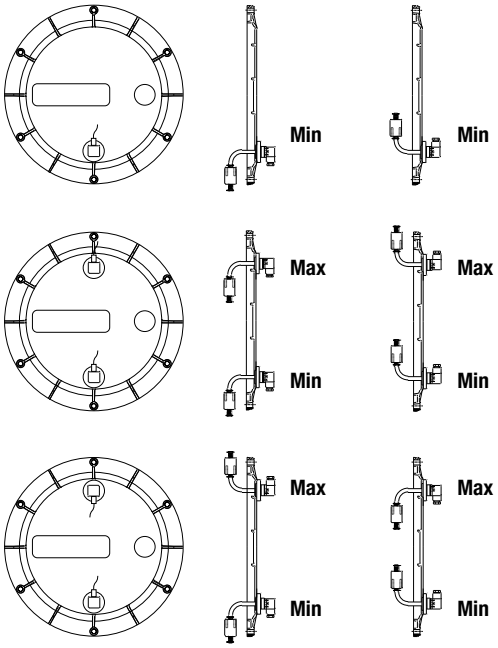

Note: Prepared for visual indicator on request

Layout of fixing holes for LEG level indicator

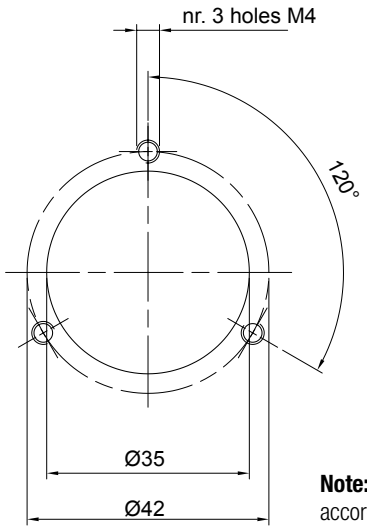

Note: Arrange the holes according to the position of the level indicator

Dimensions

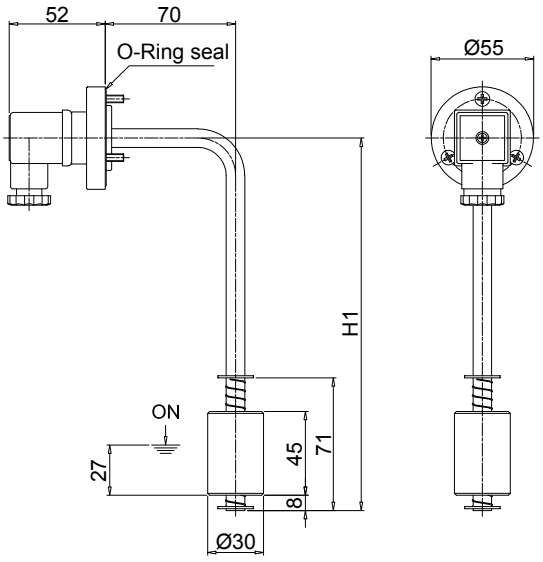

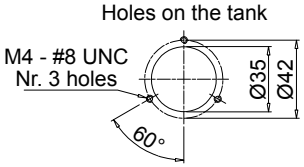

Size	H 1 [mm]	Weight [kg]
LEG 102	103	0.19
LEG 200	200	0.22

Visual level indicators code **LCPG42N...S**

Installation

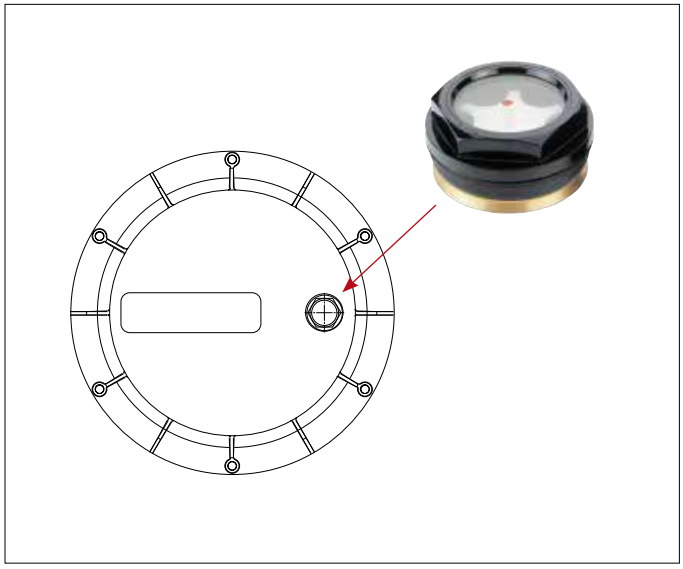

Dimensions

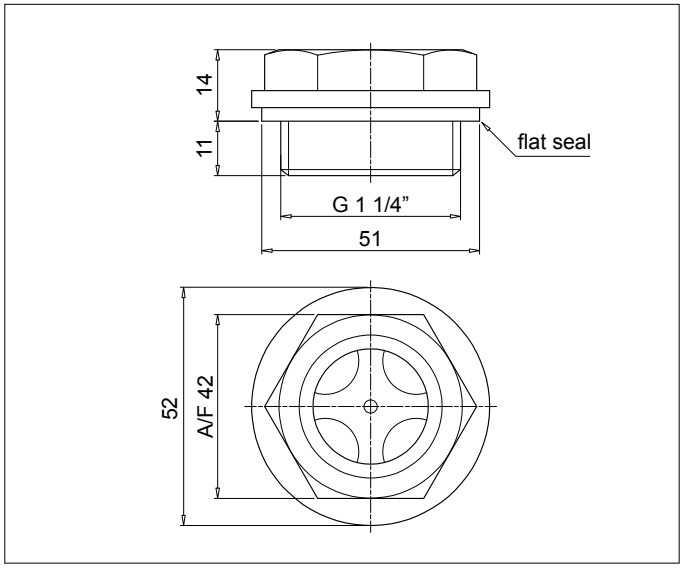

Available customization

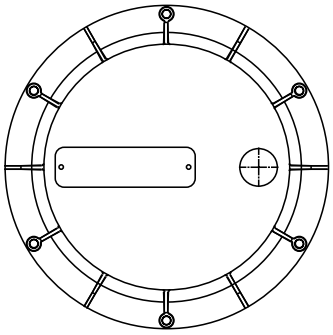

Nameplate with customer logo
Ordering information: **OB475LOGOP05**

The nameplates applied to the new inspection door are identical to those applied to the old door.
The difference with the new door is that nameplates are fixed with rivets.

For ordering information codes, minimum order quantities, fixing hole positions and other details not indicated in this publication, contact MP Filtri Technical and Sales Department.

Technical data

Made of pressure die-cast aluminium alloy, these tanks feature superior strength and optimum design and are ideal for compact hydraulic power units.

Generously proportioned fins ensure efficient cooling.

The tank is supplied with:
- M6 threaded fixing holes for lid
- feet with M8 threaded fixing holes
- G 3/8” threaded drain hole

The lid is sealed by a gasket made of special paper, which must be ordered separately indicating code “GUS 10.0”.

Dimensions

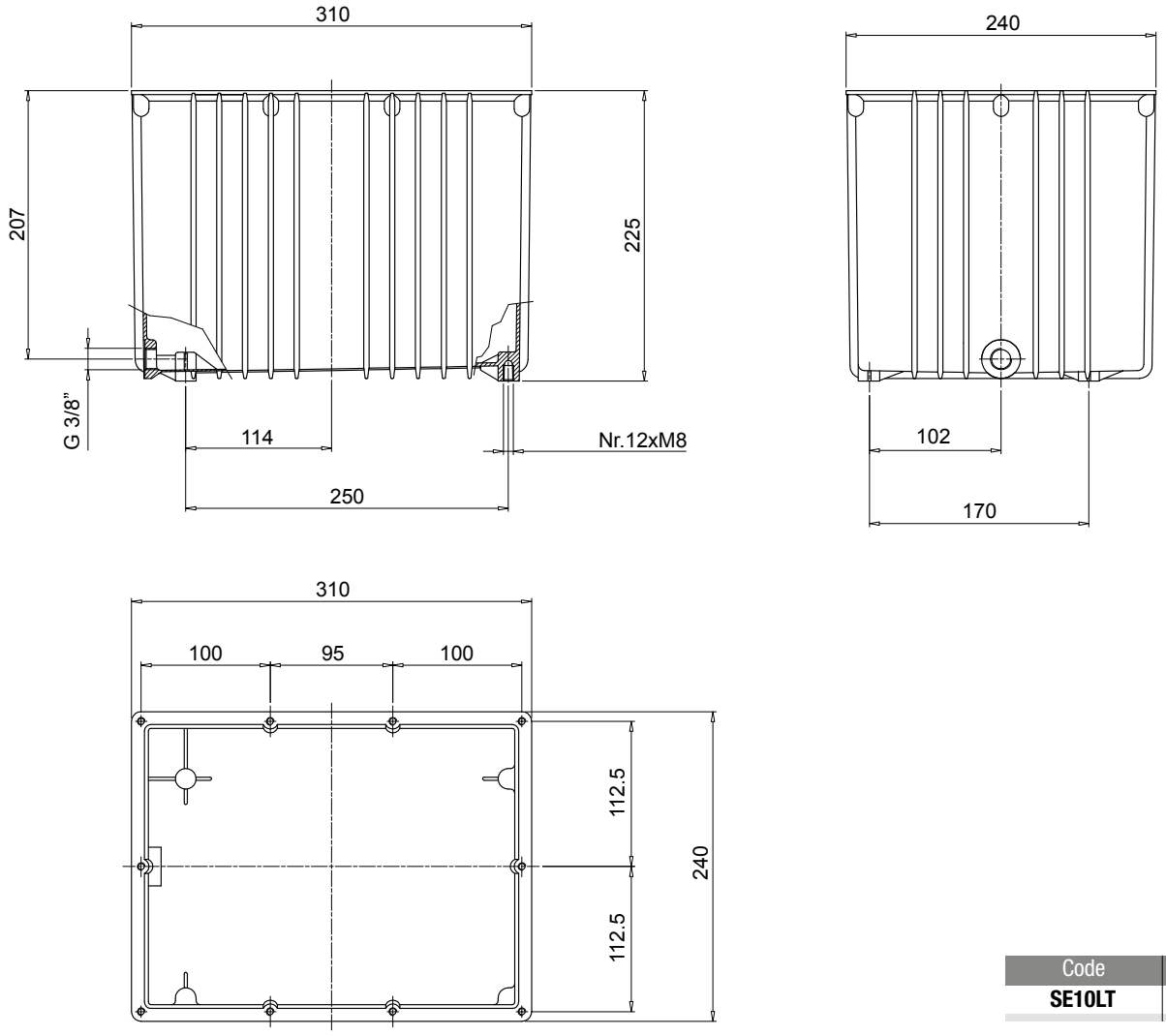

Code	Weight [kg]
SE10LT	4.0

All data, details and words contained in this publication are provided for information purposes only.
MP Filtri reserves the right to make modifications to the models and versions of the described products at any time for both technical and / or commercial reasons.
The colors and the pictures of the products are purely indicative.
Any reproduction, partial or total, of this document is strictly forbidden.
All rights are strictly reserved.

WORLDWIDE NETWORK

HEADQUARTERS

MP Filtri S.p.A.
Pessano con Bornago
Milano
Italy
sales@mpfiltri.com

BRANCH OFFICES

ITALFILTRI LLC
Moscow
Russia
mpfiltrirussia@yahoo.com

MP Filtri Canada Inc.
Concord, Ontario
Canada
sales@mpfiltricanada.com

MP Filtri France SAS
Lyon
AURA
France
sales@mpfiltrifrance.com

MP Filtri Germany GmbH
St. Ingbert
Germany
sales@mpfiltri.de

MP Filtri India Pvt. Ltd.
Bangalore
India
sales@mpfiltri.co.in

MP Filtri (Shanghai) Co., Ltd.
Shanghai
P.R. China
sales@mpfiltrishanghai.com

MP Filtri SEA PTE Ltd.
Singapore
sales-sea@mpfiltri.com

MP Filtri U.K. Ltd.
Bourton on the Water
Gloucestershire
United Kingdom
sales@mpfiltri.co.uk

MP Filtri U.S.A. Inc.
Quakertown, PA
U.S.A.
sales@mpfiltriusa.com

PASSION TO PERFORM

mpfiltri.com

CMPEN001X
EN - 04-2022