UFM 041

Mobile filtration unit 34 l/min flow rate

Contamination management

INDEX

		Page
1	HYDRAULIC FLUIDS	12
2	FLUIDS CONTAMINATION	12
3	EFFECTS OF CONTAMINATION ON HYDRAULIC COMPONENTS	12
4	MEASURING THE SOLID CONTAMINATION LEVEL	13
5	RECOMMENDED CONTAMINATION CLASSES	16
6	WATER IN HYDRAULIC AND LUBRICATING FLUIDS	17

1 HYDRAULIC FLUIDS

The fluid is the vector that transmits power, energy within an oleodynamic circuit. In addition to transmitting energy through the circuit, it also performs additional functions such as lubrication, protection and cooling of the surfaces.
The classification of fluids used in hydraulic systems is coded in many regulatory references, different Standards.

The most popular classification criterion divides them into the following families:
- MINERAL OILS
  Commonly used oil deriving fluids.

- FIRE RESISTANT FLUIDS
  Fluids with intrinsic characteristics of incombustibility or high flash point.

- SYNTHETIC FLUIDS
  Modified chemical products to obtain specific optimized features.

- ECOLOGICAL FLUIDS
  Synthetic or vegetable origin fluids with high biodegradability characteristics.

The choice of fluid for an hydraulic system must take into account several parameters.
These parameters can adversely affect the performance of an hydraulic system, causing delay in the controls, pump cavitation, excessive absorption, excessive temperature rise, efficiency reduction, increased drainage, wear, jam/block or air intake in the plant.

The main properties that characterize hydraulic fluids and affect their choice are:
- DYNAMIC VISCOSITY
  It identifies the fluid's resistance to sliding due to the impact of the particles forming it.

- KINEMATIC VISCOSITY
  It is a widespread formal dimension in the hydraulic field.
  It is calculated with the ratio between the dynamic viscosity and the fluid density.
  Kinematic viscosity varies with temperature and pressure variations.

- VISCOSITY INDEX
  This value expresses the ability of a fluid to maintain viscosity when the temperature changes.
  A high viscosity index indicates the fluid's ability to limit viscosity variations by varying the temperature.

- FILTERABILITY INDEX
  It is the value that indicates the ability of a fluid to cross the filter materials.
  A low filterability index could cause premature clogging of the filter material.

- WORKING TEMPERATURE
  Working temperature affects the fundamental characteristics of the fluid.
  As already seen, some fluid characteristics, such as cinematic viscosity, vary with the temperature variation.
  When choosing a hydraulic oil, must therefore be taken into account of the environmental conditions in which the machine will operate.

- COMPRESSIBILITY MODULE
  Every fluid subjected to a pressure contracts, increasing its density.
  The compressibility module identifies the increase in pressure required to cause a corresponding increase in density.

- HYDROLYTIC STABILITY
  It is the characteristic that prevents galvanic pairs that can cause wear in the plant/system.

- ANTIOXIDANT STABILITY AND WEAR PROTECTION
  These features translate into the capacity of a hydraulic oil to avoid corrosion of metal elements inside the system.

- HEAT TRANSFER CAPACITY
  It is the characteristic that indicates the capacity of hydraulic oil to exchange heat with the surfaces and then cool them.

2 FLUID CONTAMINATION

Whatever the nature and properties of fluids, they are inevitably subject to contamination. Fluid contamination can have two origins:

- INITIAL CONTAMINATION
  Caused by the introduction of contaminated fluid into the circuit, or by incorrect storage, transport or transfer operations.

- PROGRESSIVE CONTAMINATION
  Caused by factors related to the operation of the system, such as metal surface wear, sealing wear, oxidation or degradation of the fluid, the introduction of contaminants during maintenance, corrosion due to chemical or electrochemical action between fluid and components, cavitation.
  The contamination of hydraulic systems can be of different nature:

- SOLID CONTAMINATION
  For example rust, slag, metal particles, fibers, rubber particles, paint particles
- or additives

- LIQUID CONTAMINATION
  For example, the presence of water due to condensation or external infiltration or acids

- GASEOUS CONTAMINATION
  For example, the presence of air due to inadequate oil level in the tank, drainage in suction ducts, incorrect sizing of tubes or tanks.

3 EFFECTS OF CONTAMINATION ON HYDRAULIC COMPONENTS

Solid contamination is recognized as the main cause of malfunction, failure and early degradation in hydraulic systems. It is impossible to delete it completely, but it can be effectively controlled by appropriate devices.

CONTAMINATION IN PRESENCE OF LARGE TOLERANCES

CONTAMINATION IN PRESENCE OF NARROW TOLERANCES

Solid contamination mainly causes surface damage and component wear.

- SURFACE EROSION
  Cause of leakage through mechanical seals, reduction of system performance, variation in adjustment of control components, failures.

- ADHESION OF MOVING PARTS
  Cause of failure due to lack of lubrication.

- DAMAGES DUE TO FATIGUE
  Cause of breakdowns and components breakdown.

ABRASION

EROSION

ADHESION

FATIGUE

Liquid contamination mainly results in decay of lubrication performance and protection of fluid surfaces.

DISSOLVED WATER

- INCREASING FLUID ACIDITY
  Cause of surface corrosion and premature fluid oxidation

- GALVANIC COUPLE AT HIGH TEMPERATURES
  Cause of corrosion

FREE WATER - ADDITIONAL EFFECTS

- DECAY OF LUBRICANT PERFORMANCE
  Cause of rust and sludge formation, metal corrosion and increased solid contamination

- BATTERY COLONY CREATION
  Cause of worsening in the filterability feature

- ICE CREATION AT LOW TEMPERATURES
  Cause damage to the surface

- ADDITIVE DEPLETION
  Free water retains polar additives

Gaseous contamination mainly results in decay of system performance.

- CUSHION SUSPENSION
  Cause of increased noise and cavitation.

- FLUID OXIDATION
  Cause of corrosion acceleration of metal parts.

- MODIFICATION OF FLUID PROPERTIES
  (COMPRESSIBILITY MODULE, DENSITY, VISCOSITY)
  Cause of system's reduction of efficiency and of control.
  It is easy to understand how a system without proper contamination management is subject to higher costs than a system that is provided.

- MAINTENANCE
  Maintenance activities, spare parts, machine stop costs

- ENERGY AND EFFICIENCY
  Efficiency and performance reduction due to friction, drainage, cavitation.

4 MEASURING THE SOLID CONTAMINATION LEVEL

The level of contamination of a system identifies the amount of contaminant contained in a fluid.
This parameter refers to a unit volume of fluid.
The level of contamination may be different at different points in the system.
From the information in the previous paragraphs it is also apparent that the level of contamination is heavily influenced by the working conditions of the system, by its working years and by the environmental conditions.

What is the size of the contaminating particles that we must handle in our hydraulic circuit?

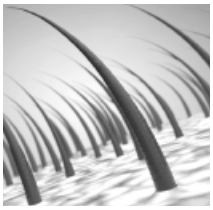

HUMAN HAIR
(75 µm)

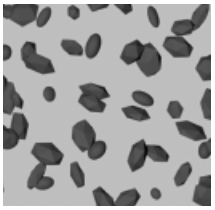

MINIMUM DIMENSION VISIBLE WITH HUMAN EYES
(40 µm)

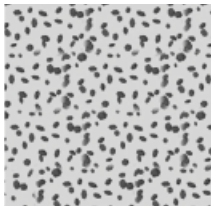

TYPICAL CONTAMINANT DIMENSION IN A HYDRAULIC CIRCUIT
(4-14 µm)

Contamination level analysis is significant only if performed with a uniform and repeatable method, conducted with standard test methods and suitably calibrated equipment.
To this end, ISO has issued a set of standards that allow tests to be conducted and express the measured values in the following ways.

- GRAVIMETRIC LEVEL - ISO 4405

The level of contamination is defined by checking the weight of particles collected by a laboratory membrane. The membrane must be cleaned, dried and desiccated, with fluid and conditions defined by the Standard.
The volume of fluid is filtered through the membrane by using a suitable suction system. The weight of the contaminant is determined by checking the weight of the membrane before and after the fluid filtration.

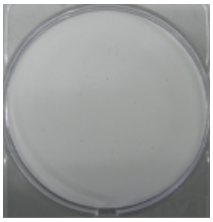

CLEAN
MEMBRANE

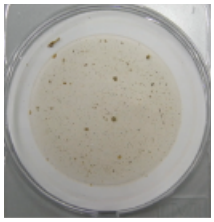

CONTAMINATED
MEMBRANE

- CUMULATIVE DISTRIBUTION OF THE PARTICLES SIZE - ISO 4406

The level of contamination is defined by counting the number of particles of certain dimensions per unit of volume of fluid. Measurement is performed by Automatic Particle Counters (APC).
Following the count, the contamination classes are determined, corresponding to the number of particles detected in the unit of fluid.
The most common classification methods follow ISO 4406 and SAE AS 4059 (Aerospace Sector) regulations.
NAS 1638 is still used although obsolete.

Classification example according to ISO 4406

The International Standards Organisation standard ISO 4406 is the preferred method of quoting the number of solid contaminant particles in a sample.
The code is constructed from the combination of three scale numbers selected from the following table.
The first number represents the number of particles that are larger than 4 $\mu m_{(c)}$.
The second number represents the number of particles larger than 6 $\mu m_{(c)}$.
The third scale number represents the number of particles in a millilitre sample of the fluid that are larger than 14 $\mu m_{(c)}$.

ISO 4406 - Allocation of Scale Numbers

Class	Number of particles per ml	
	Over	Up to
28	1 300 000	2 500 000
27	640 000	1 300 000
26	320 000	640 000
25	160 000	320 000
24	80 000	160 000
23	40 000	80 000
22	20 000	40 000
21	10 000	20 000
20	5 000	10 000
19	2 500	5 000
18	1 300	2 500
17	640	1 300
16	320	640
15	160	320
14	80	160
13	40	80
12	20	40
11	10	20
10	5	10
9	2.5	5
8	1.3	2.5
7	0.64	1.3
6	0.32	0.64
5	0.16	0.32
4	0.08	0.16
3	0.04	0.08
2	0.02	0.04
1	0.01	0.02
0	0	0.01

> 4 $\mu m_{(c)}$ = 350 particles
> 6 $\mu m_{(c)}$ = 100 particles
> 14 $\mu m_{(c)}$ = 25 particles
16 / 14 / 12

ISO 4406 Cleanliness Code System

Microscope counting examines the particles differently to APCs and the code is given with two scale numbers only.
These are at 5 µm and 15 µm equivalent to the 6 $\mu m_{(c)}$ and 14 $\mu m_{(c)}$ of APCs.

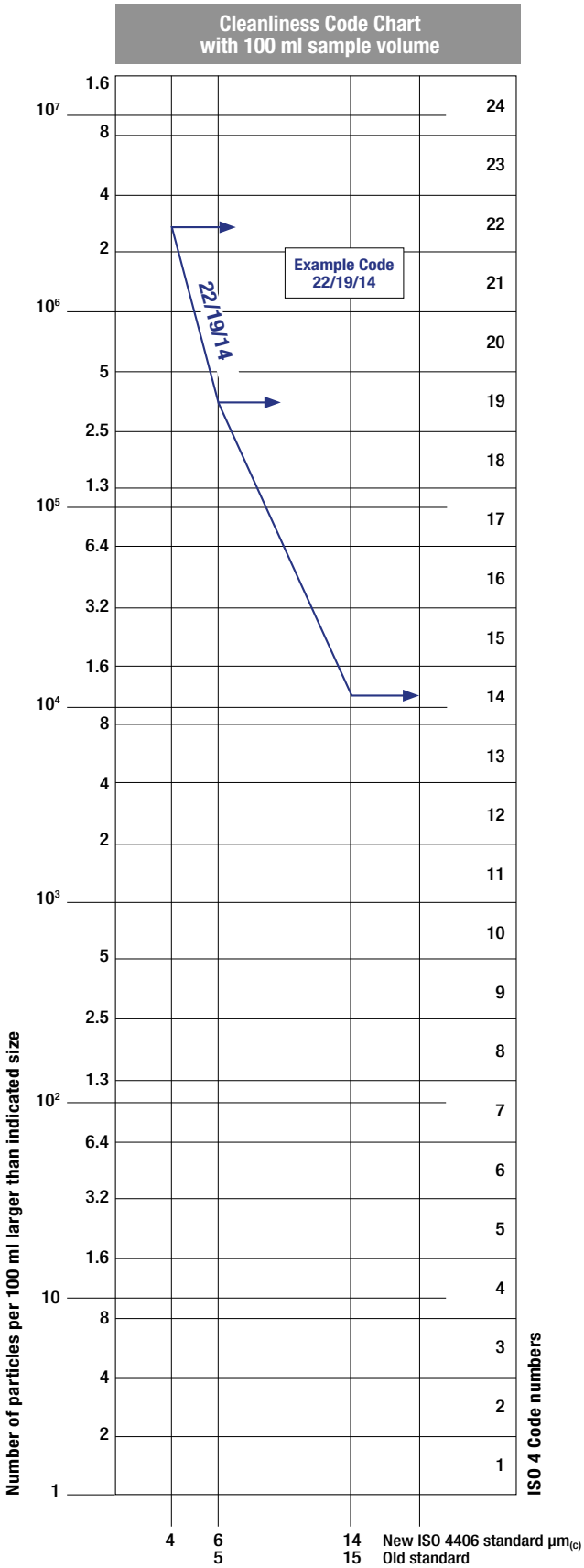

- CUMULATIVE DISTRIBUTION OF THE PARTICLES SIZE - SAE AS 4059-1 and SAE AS 4059-2

Classification example according to
SAE AS4059 - Rev. E and SAE AS4059-2 - Rev. F
The code, prepared for the aerospace industry, is based on the size, quantity, and particle spacing in a 100 ml fluid sample. The contamination classes are defined by numeric codes, the size of the contaminant is identified by letters (A-F).

SAE AS4059 - REV. E

It can be made a differential measurement (Table 1) or a cumulative measurement (Table 2)

Table 1 - Class for differential measurement

Class	Dimension of contaminant Maximum Contamination Limits per 100 ml				
	6-14 µm(c)	14-21 µm(c)	21-38 µm(c)	38-70 µm(c)	>70 µm(c)
00	125	22	4	1	0
0	250	44	8	2	0
1	500	89	16	3	1
2	1 000	178	32	6	1
3	2 000	356	63	11	2
4	4 000	712	126	22	4
5	8 000	1 425	253	45	8
6	16 000	2 850	506	90	16
7	32 000	5 700	1 012	180	32
8	64 000	11 400	2 025	360	64
9	128 000	22 800	4 050	720	128
10	256 000	45 600	8 100	1 440	256
11	512 000	91 200	16 200	2 880	512
12	1 024 000	182 400	32 400	5 760	1 024

6 - 14 µm(c) = 15 000 particles
14 - 21 µm(c) = 2 200 particles
21 - 38 µm(c) = 200 particles
38 - 70 µm(c) = 35 particles
> 70 µm(c) = 3 particles
SAE AS4059 REV E - Class 6

Table 2 - Class for cumulative measurement

Class	Dimension of contaminant Maximum Contamination Limits per 100 ml					
	>4 µm(c)	>6 µm(c)	>14 µm(c)	>21 µm(c)	>38 µm(c)	>70 µm(c)
000	195	76	14	3	1	0
00	390	152	27	5	1	0
0	780	304	54	10	2	0
1	1 560	609	109	20	4	1
2	3 120	1 217	217	39	7	1
3	6 250	2 432	432	76	13	2
4	12 500	4 864	864	152	26	4
5	25 000	9 731	1 731	306	53	8
6	50 000	19 462	3 462	612	106	16
7	100 000	38 924	6 924	1 224	212	32
8	200 000	77 849	13 849	2 449	424	64
9	400 000	155 698	27 698	4 898	848	128
10	800 000	311 396	55 396	9 796	1 696	256
11	1 600 000	622 792	110 792	19 592	3 392	512
12	3 200 000	1 245 584	221 584	39 184	6 784	1 024

> 4 µm(c) = 45 000 particles
> 6 µm(c) = 15 000 particles
> 14 µm(c) = 1 500 particles
> 21 µm(c) = 250 particles
> 38 µm(c) = 15 particles
> 70 µm(c) = 3 particle
SAE AS4059 REV E
6A/6B/5C/5D/4E/2F

The information reproduced on this page is a brief extract from SAE AS4059 Rev.E, revised in May 2005. For further details and explanations refer to the full Standard.

SAE AS4059 - REV. F

It can be made a differential measurement (Table 1) or a cumulative measurement (Table 2)

Table 1 - Class for differential measurement

Class	Dimension of contaminant Maximum Contamination Limits per 100 ml					(3)
	5-15 µm	15-25 µm	25-50 µm	50-100 µm	>100 µm	(1)
	6-14 µm(c)	14-21 µm(c)	21-38 µm(c)	38-70 µm(c)	>70 µm(c)	(2)
00	125	22	4	1	0	
0	250	44	8	2	0	
1	500	89	16	3	1	
2	1 000	178	32	6	1	
3	2 000	356	63	11	2	
4	4 000	712	126	22	4	
5	8 000	1 425	253	45	8	
6	16 000	2 850	506	90	16	
7	32 000	5 700	1 012	180	32	
8	64 000	11 400	2 025	360	64	
9	128 000	22 800	4 050	720	128	
10	256 000	45 600	8 100	1 440	256	
11	512 000	91 200	16 200	2 880	512	
12	1 024 000	182 400	32 400	5 760	1 024	

6 - 14 µm(c) = 15 000 particles
14 - 21 µm(c) = 2 200 particles
21 - 38 µm(c) = 200 particles
38 - 70 µm(c) = 35 particles
> 70 µm(c) = 3 particles
SAE AS4059 REV F - Class 6

(1) Size range, microscope particle counts, based on longest dimension as measured per AS598 or ISO 4407.
(2) Size range, APC calibrated per ISO 11171 or an optical or electron microscope with image analysis software, based on projected area equivalent diameter.
(3) Contamination classes and particle count limits are identical to NAS 1638.

Table 2 - Class for cumulative measurement

Class	Dimension of contaminant Maximum Contamination Limits per 100 ml						
	>1 µm	>5 µm	>15 µm	>25 µm	>50 µm	>100 µm	(1)
	>4 µm(c)	>6 µm(c)	>14 µm(c)	>21 µm(c)	>38 µm(c)	>70 µm(c)	(2)
000	195	76	14	3	1	0	
00	390	152	27	5	1	0	
0	780	304	54	10	2	0	
1	1 560	609	109	20	4	1	
2	3 120	1 217	217	39	7	1	
3	6 250	2 432	432	76	13	2	
4	12 500	4 864	864	152	26	4	
5	25 000	9 731	1 731	306	53	8	
6	50 000	19 462	3 462	612	106	16	
7	100 000	38 924	6 924	1 224	212	32	
8	200 000	77 849	13 849	2 449	424	64	
9	400 000	155 698	27 698	4 898	848	128	
10	800 000	311 396	55 396	9 796	1 696	256	
11	1 600 000	622 792	110 792	19 592	3 392	512	
12	3 200 000	1 245 584	221 584	39 184	6 784	1 024	

> 4 µm(c) = 45 000 particles
> 6 µm(c) = 15 000 particles
> 14 µm(c) = 1 500 particles
> 21 µm(c) = 250 particles
> 38 µm(c) = 15 particles
> 70 µm(c) = 3 particle
SAE AS4059 REV F
cpc* Class 6 6/6/5/5/4/2

* cumulative particle count

(1) Size range, optical microscope, based on longest dimension as measured per AS598 or ISO 4407.
(2) Size range, APC calibrated per ISO 11171 or an optical or electron microscope with image analysis software, based on projected area equivalent diameter.

- CLASSES OF CONTAMINATION ACCORDING TO NAS 1638 (January 1964)

The NAS system was originally developed in 1964 to define contamination classes for the contamination contained within aircraft components.
The application of this standard was extended to industrial hydraulic systems simply because nothing else existed at the time.
The coding system defines the maximum numbers permitted of 100 ml volume at various size intervals (differential counts) rather than using cumulative counts as in ISO 4406. Although there is no guidance given in the standard on how to quote the levels, most industrial users quote a single code which is the highest recorded in all sizes and this convention is used on MP Filtri APC's.

The contamination classes are defined by a number (from 00 to 12) which indicates the maximum number of particles per 100 ml, counted on a differential basis, in a given size bracket.

Size Range Classes (in microns)

Maximum Contamination Limits per 100 ml					
Class	5-15	15-25	25-50	50-100	>100
00	125	22	4	1	0
0	250	44	8	2	0
1	500	89	16	3	1
2	1 000	178	32	6	1
3	2 000	356	63	11	2
4	4 000	712	126	22	4
5	8 000	1 425	253	45	8
6	16 000	2 850	506	90	16
7	32 000	5 700	1 012	180	32
8	64 000	11 400	2 025	360	64
9	128 000	22 800	4 050	720	128
10	256 000	45 600	8 100	1 440	256
11	512 000	91 200	16 200	2 880	512
12	1 024 000	182 400	32 400	5 760	1 024

5 - 15 µm = 42 000 particles
15 - 25 µm = 2 200 particles
25 - 50 µm = 150 particles
50 - 100 µm= 18 particles
> 100 µm = 3 particles
Class NAS 8

- CUMULATIVE DISTRIBUTION OF THE PARTICLES SIZE - ISO 4407

The level of contamination is defined by counting the number of particles collected by a laboratory membrane per unit of fluid volume. The measurement is done by a microscope. The membrane must be cleaned, dried and desiccated, with fluid and conditions defined by the Standard. The fluid volume is filtered through the membrane, using a suitable suction system.
The level of contamination is identified by dividing the membrane into a predefined number of areas and by counting the contaminant particles using a suitable laboratory microscope.

MICROSCOPE CONTROL AND MEASUREMENT

COMPARISON PHOTOGRAPH'S
1 graduation = 10µm

Fig. 1

Fig. 2

Example figure 1and 2		
ISO 4406	Class 16/14/11	Class 22/20/17
SAE AS4059E Table 1	Class 5	Class 11
NAS 1638	Class 5	Class 11
SAE AS4059E Table 2	Class 6A/5B/5C	Class 12A/11B/11C

For other comparison photographs for contamination classes see the "*Fluid Condition and Filtration Handbook*".

- CLEANLINESS CODE COMPARISON

Although ISO 4406 standard is being used extensively within the hydraulics industry other standards are occasionally required and a comparison may be requested. The table below gives a very general comparison but often no direct comparison is possible due to the different classes and sizes involved.

ISO 4406	SAE AS4059 Table 2	SAE AS4059 Table 1	NAS 1638
> 4 µm(c) 6 µm(c) 14 µm(c)	> 4 µm(c) 6 µm(c) 14 µm(c)	4-6 6-14 14-21 21-38 38-70 >70	5-15 15-25 25-50 50-100 >100
23 / 21 / 18	13A / 12B / 12C	12	12
22 / 20 / 17	12A / 11B / 11C	11	11
21 / 19 / 16	11A / 10B / 10C	10	10
20 / 18 / 15	10A / 9B / 9B	9	9
19 / 17 / 14	9A / 8B / 8C	8	8
18 / 16 / 13	8A / 7B / 7C	7	7
17 / 15 / 12	7A / 6B / 6C	6	6
16 / 14 / 11	6A / 5B / 5C	5	5
15 / 13 / 10	5A / 4B / 4C	4	4
14 / 12 / 09	4A / 3B / 3C	3	3

5 RECOMMENDED CONTAMINATION CLASSES

The table below, gives a selection of maximum contamination levels that are typically issued by component manufacturer.
These relate to the use of the correct viscosity mineral fluid. An even cleaner level may be needed if the operation
is severe, such as high frequency fluctuations in loading, high temperature or high failure risk.

Piston pumps with fixed flow rate	•					
Piston pumps with variable flow rate			•			
Vane pumps with fixed flow rate		•				
Vane pumps with variable flow			•			
Engines	•					
Hydraulic cylinders	•					
Actuators					•	
Test benches						•
Check valve	•					
Directional valves	•					
Flow regulating valves	•					
Proportional valves				•		
Servo-valves					•	
Flat bearings			•			
Ball bearings				•		
ISO 4406 CODE	20/18/15	19/17/14	18/16/13	17/15/12	16/14/11	15/13/10
Recommended filtration $\beta_{x(c)} \geq 1.000$	$\beta_{20(c)}$ >1000	$\beta_{15(c)}$ >1000	$\beta_{10(c)}$ >1000	$\beta_{7(c)}$ >1000	$\beta_{7(c)}$ >1000	$\beta_{5(c)}$ >1000

6 WATER IN HYDRAULIC AND LUBRICATING FLUIDS

Water Content

In mineral oils and non aqueous resistant fluids water is undesirable. Mineral oil usually has a water content of 50-300 ppm (@40°C) which it can support without adverse consequences.
Once the water content exceeds about 300 ppm the oil starts to appear hazy. Above this level there is a danger of free water accumulating in the system in areas of low flow. This can lead to corrosion and accelerated wear.
Similarly, fire resistant fluids have a natural water which may be different to mineral oil.

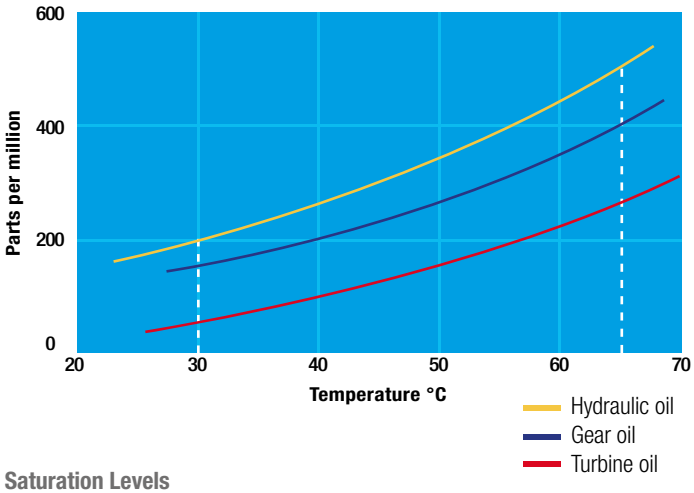

Saturation Levels

Since the effects of free (also emulsified) water is more harmful than those of dissolved water, water levels should remain well below the saturation point.

However, even water in solution can cause damage and therefore every reasonable effort should be made to keep saturation levels as low as possible. There is no such thing as too little water. As a guideline, we recommend maintaining saturation levels below 50% in all equipment.

TYPICAL WATER SATURATION LEVEL FOR NEW OILS
Examples:
Hydraulic oil @ 30°C = 200 ppm = 100% saturation
Hydraulic oil @ 65°C = 500 ppm = 100% saturation

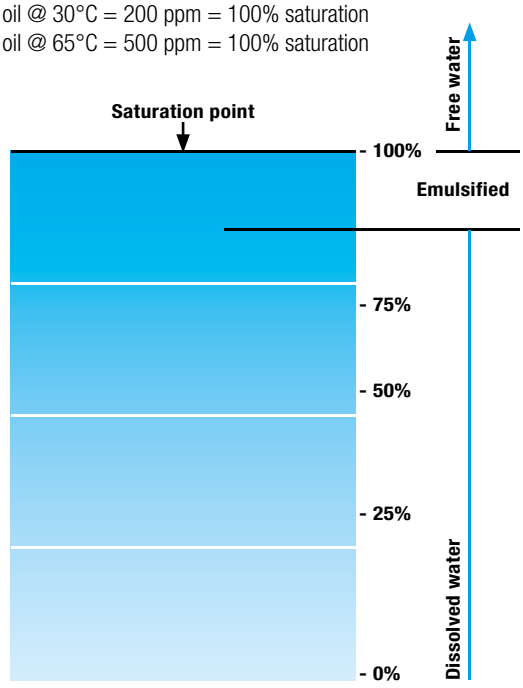

W - Water and Temperature Sensing

"W" option, in MP Filtri Contamination Monitoring Products, indicates water content as a percentage of saturation and oil temperature in degrees centigrade. 100% RH corresponds to the point at which free water can exist in the fluid. i.e. the fluid is no longer able to hold the water in a dissolved solution.
The sensor can help provide early indication of costly failure due to free water, including but not exclusive to corrosion, metal surface fatigue e.g. bearing failure, reduced lubrication & load carrying characteristics.

Different oils have different saturation levels and therefore RH (relative humidity) % is the best and most practical measurement.

Water absorber

Water is present everywhere, during storage, handling and servicing.
MP Filtri filter elements feature an absorbent media which protects hydraulic systems from both particulate and water contamination.
MP Filtri's filter element technology is available with inorganic microfiber media with a filtration rating 25 µm (therefore identified with media designation WA025, providing absolute filtration of solid particles to $\beta_{x(c)} = 1000$).
Absorbent media is made by water absorbent fibres which increase in size during the absorption process. Free water is thus bonded to the filter media and completely removed from the system (it cannot even be squeezed out).

Filter Media

Fabric that absorbs water

Absorber media layer

The Filter Media has absorbed water

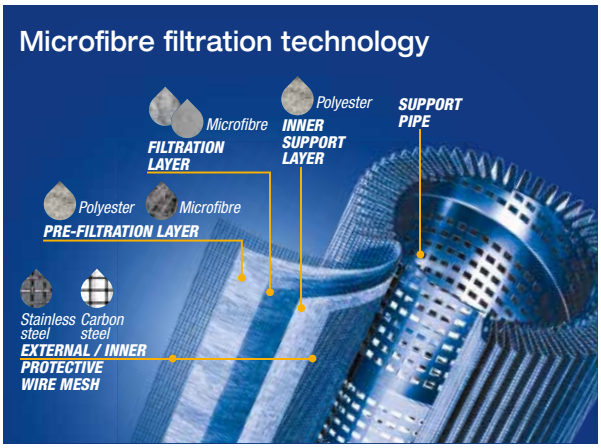

By removing water from your fluid power system, you can prevent such key problems as:
- corrosion (metal etching)
- loss of lubricant power
- accelerated abrasive wear in hydraulic components
- valve-locking
- bearing fatigue
- viscosity variance (reduction in lubricating properties)
- additive precipitation and oil oxidation
- increase in acidity level
- increased electrical conductivity (loss of dielectric strength)
- slow/weak response of control systems

Product availability - UFM Series:
UFM 041 - UFM 051 - UFM 091 - UFM 181 - UFM 919

Description

Mobile filtration units

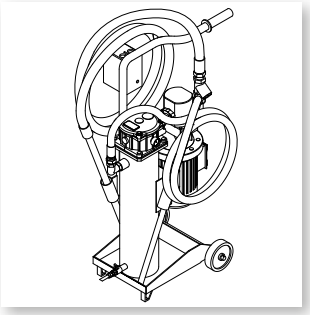

UFM 041 mobile filtration units suitable for filling and refilling of filtered hydraulic fluids and lubrication tanks.

The filter unit connected to off-line to the tank (recommended maximum volume of 350/500 L.), can be used as a support to the filtration plant on start-up for fast flushing action, either as additional filtration systems with a high incidence of contamination.

Continued use is recommended for the version with three phase electric motor.

> Features & Benefits

- Compact size
- Light
- Easy to use
- Easy maintenance
- Reliable
- Absolute filtration

Technical data

Pump
Gear pump

Electric Motor
0.75 kW 230 V single phase electric motor
0.75 kW 400/230 V three phase electric motor

Flow (l/min)
34 l/min - 1450 r.p.m.

Max. Operation Pressure
5.0 bar

Viscosity range
Min. operation 10 cSt
Max. operation 200 cSt
Max. only for cold start 800 cSt

Suction Filter
Type Y filtration 350 µm

Filtration Rating
1, 3, 6, 10, 25 µm β>1000 flow through the element In/Out

Bypass valve Δp set
Rating 3 bar

Fluid Temperature
From -10° to +80 °C

Ambient Temperature
From -20° to +45 °C

Protection Class
IP55

Seal
NBR

Fluid Compatibility
Mineral Oil & Synthetic Oil - Other on request

Suction hose	**lance**
DN25 length 3000 mm	DN/OD25 length 700 mm

Pressure hose	**lance**
DN20 length 3000 mm	DN/OD20 length 700 mm

Weight
45 kg

Equipment
Visual clogging indicator (gauge)

CE **Standard**

UFM 041

Designation & Ordering code

MOBILE FILTRATION UNIT UFM 041

Configuration example: UFM | 041 | T | A | 1 | 0 | 1 | 0 | P01

Series
UFM

Size
041 34 l/min

Electric motor
M 230 V single phase
T 400/230 V three phase

Seals
A NBR

Pressure gauges and Clogging indicators
1 Manometer

Filter element
0 Without element

Filtration surface
1 Standard

Option
0 No options

Option
P01 MP Filtri standard
Pxx Customized

Filtration element should be ordered separately

FILTRATION SURFACE - STANDARD

Inorganic microfibre	Wire mesh element
MR 250 4 A01 A P01	MR 250 4 M25 A P01
MR 250 4 A03 A P01	MR 250 4 M60 A P01
MR 250 4 A06 A P01	
MR 250 4 A10 A P01	
MR 250 4 A16 A P01	
MR 250 4 A25 A P01	

WATER REMOVAL - FILTRATION SURFACE - STANDARD

Multi-Layer water absorber
MR2504WA025AP01

Dimensions

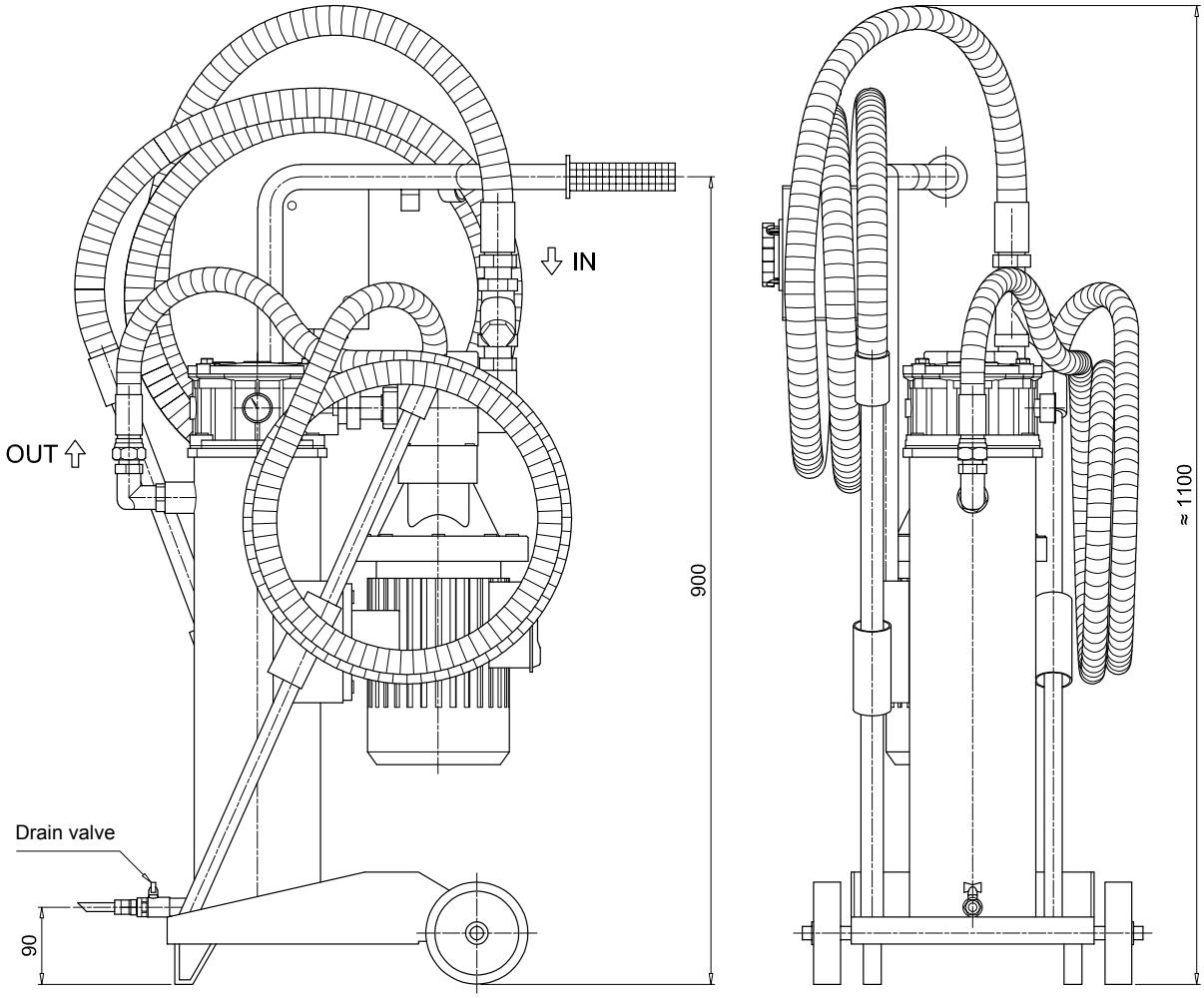

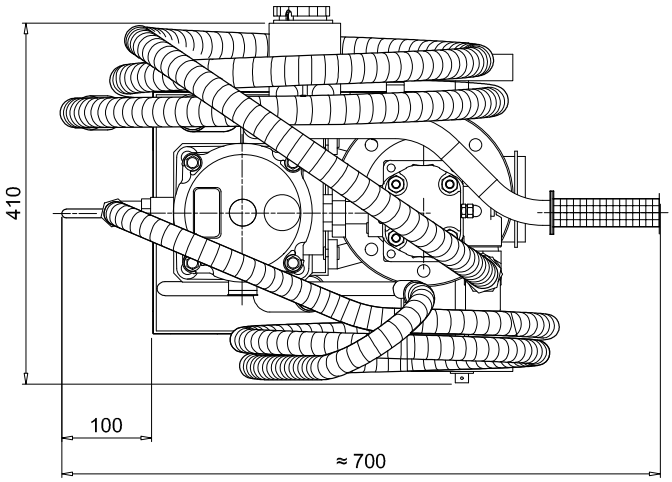
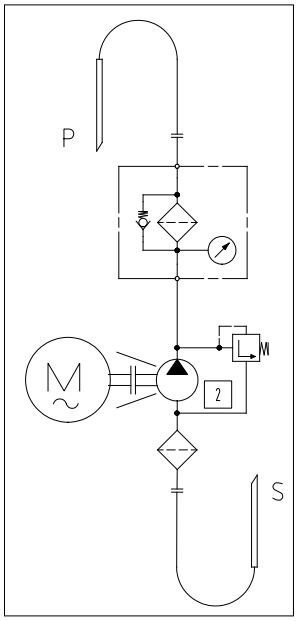
HYDRAULIC CIRCUIT